State of California
AIR RESOURCES BOARD

Executive Order G-70-132-A

Certification of Trusco Tank, Inc., Supervault
Aboveground Tank Filling/Dispensing
Vapor Recovery System

WHEREAS, the Air Resources Board (the "Board") has established, pursuant to Sections 39600, 39601, and 41954 of the Health and Safety Code, certification procedures for systems designed for the control of gasoline vapor emissions displaced during the filling of storage tanks at service stations ("Phase I vapor recovery systems") and for the control of gasoline vapor emissions from motor vehicle fueling operations ("Phase II vapor recovery systems") in its "Certification Procedures for Gasoline Vapor Recovery Systems at Service Stations" as last amended December 4, 1981 (the "Certification Procedures"), incorporated by reference in Section 94001 of Title 17, California Code of Regulations;

WHEREAS, the Board has established, pursuant to Sections 39600, 39601, and 41954 of the Health and Safety Code, test procedures for determining compliance of Phase I and Phase II vapor recovery systems with emission standards in its "Test Procedures for Determining the Efficiency of Gasoline Vapor Recovery Systems at Service Stations" as last amended September 1, 1982 (the "Test Procedures"), incorporated by reference in Section 94000 of Title 17, California Code of Regulations;

WHEREAS, Trusco Tank, Inc., has applied for Phase I and Phase II vapor recovery certification of its Supervault's vapor recovery system for use with gasoline and gasoline/methanol blended fuels and on single product tanks up to 12,000 gallons total capacity, cylindrical in shape, and with top loading Phase I and top dispensing Phase II vapor recovery equipment;

WHEREAS, Section VIII-A of the Certification Procedures provides that the Executive Officer shall issue an order of certification if he or she determines that a vapor recovery system conforms to all of the requirements set forth in Sections I through VII; and

WHEREAS, I find that the Trusco Tank, Inc., Supervault aboveground storage tank vapor recovery system, when used with ARB Certified Phase I and Phase II balance vapor recovery components, conforms with all the requirements set forth in Sections I through VII of the Certification Procedures;

NOW, THEREFORE, IT IS HEREBY ORDERED that this certification applies to the Trusco Tank, Inc., Supervault aboveground gasoline storage tank vapor recovery system. The system certified hereby is shown in Exhibit 1, attached. In lieu of utilizing a overhead hose retractor as part of the Phase II equipment, the Supervault may be equipped with a venturi-type coaxial hose assembly as shown in Exhibit 2, attached. The Supervault vapor recovery system certified by this order may be used with gasoline and gasoline/methanol blended fuels and on tanks with the same geometric configuration and design shown, with top loading Phase I and top dispensing Phase II vapor recovery equipment, and in sizes varying from 250 to 12,000 gallons total capacity.

Use of Air Resources Board certified Phase I and Phase II vapor recovery components shall be a condition to certification. A listing of certified vapor recovery components incorporated by Trusco Tank, Inc., in their Supervault tank recovery system is given in Exhibit 3, attached. In the alternative, Air Resources Board certified Phase I components from Exhibits 1 through 3 of Executive Order G-70-97-A and Exhibits 1 and 2 of Executive Order G-70-142-A and certified balance system Phase II components from Executive Order G-70 series may be used.

IT IS FURTHER ORDERED that any emergency vent installed on the tanks be leak free at the operating pressure of the tank when tested in accordance with ARB Method 2-6, "Test Procedures for Gasoline Vapor Leak Detection Using Combustible Gas Detector" as adopted September 1, 1982, incorporated by reference in Section 94007 of Title 17, California Code of Regulations.

IT IS FURTHER ORDERED that the threaded stem normally used with the Bobtail truck bulk delivery nozzle be replaced with an OPW 633-B coupler along with OPW 633-BA series coupler/adaptor(s) (or an equivalent arrangement that allows for no leakage of gasoline) to connect the Bobtail truck bulk delivery nozzle with the storage tank fill adaptor (or coaxial fill adaptor) during transfer of gasoline from the delivery truck to the storage tank.

IT IS FURTHER ORDERED that a minimum of 6 inches of proprietary insulating material be installed between the interior holding tank and the exterior containment tank of all storage tanks as shown in Exhibits 1 and 2.

IT IS FURTHER ORDERED that the general exterior of the storage tanks be painted white.

IT IS FURTHER ORDERED that prior to using any Supervault tank for storage of gasoline or gasoline/methanol blended fuel its vapor recovery system shall be leak checked at or above the working pressure of the system (PV vent setting) and verified to be vapor tight. Thereafter, the vapor recovery system shall be checked once a year to ensure a vapor tight system and proper operation of the vapor recovery equipment.

IT IS FURTHER ORDERED that compliance with the rules and regulations of the local air pollution control district with jurisdiction where the installed system is located, shall be made a condition of this certification.

IT IS FURTHER ORDERED that the tank and associated piping and other equipment not specifically listed as approved Phase I equipment in Exhibit 3 of this Executive Order, in Exhibits 1 through 3 of Executive Order G-70-97-A, or Exhibits 1 and 2 of Executive Order G-70-142-A, nor specifically listed as approved Phase II equipment in Exhibit 3 of this Executive Order or in Executive Order G-70 series shall comply with the rules and regulations of the local fire officials with jurisdiction where the installed system is located, and that the use of a PV vent shall require the prior approval of such local fire official.

IT IS FURTHER ORDERED that compliance with all applicable certification requirements and rules and regulations of the Division of Measurement Standards, the Office of the State Fire Marshal, and the Division of Occupational Safety and Health of the Department of Industrial Relations shall be made a condition of this certification.

IT IS FURTHER ORDERED that any alteration of the equipment, parts, design, or operation of configurations certified hereby, is prohibited, and deemed inconsistent with this certification, unless such alteration has been approved by the undersigned or the Executive Officer's designee.

Executed this 4th day of December, 1992, at Sacramento, California.

James D. Boyd
Executive Officer

Exhibit 1

Executive Order G-70-132-A

Trusco Tank, Inc., Supervault Aboveground Gasoline
Tank Filling/Dispensing Vapor Recovery System

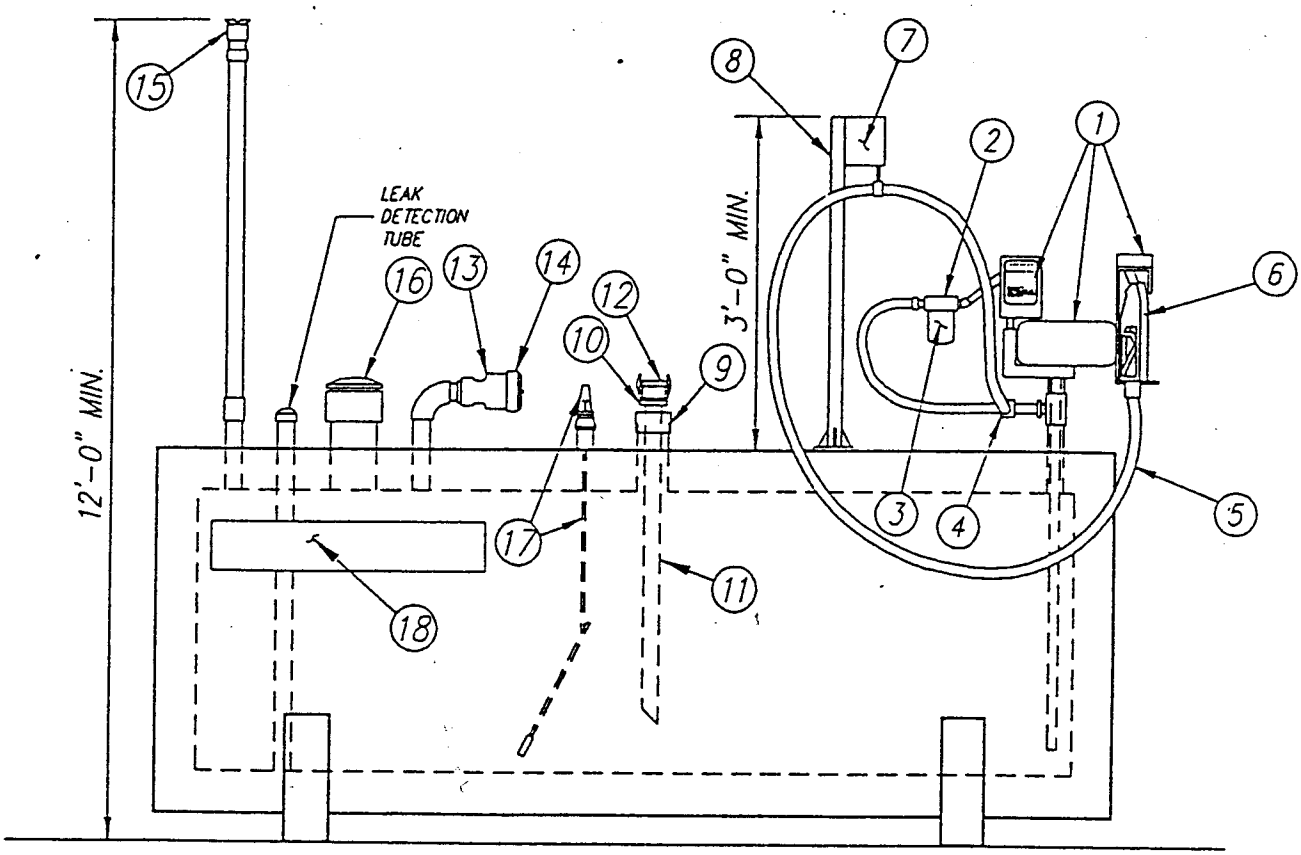

TANK MODEL NUMBER	NOMINAL CAPACITY	PRIMARY TANK THICKNESS	OUTER TANK THICKNESS	OVERALL HEIGHT (H)	OVERALL WIDTH (D)	OVERALL LENGTH (L)	TANK WEIGHT w/o INSULATION (lbs.)	TANK WEIGHT w/ INSULATION (lbs.)
FL-01-250	250	10 ga.	10 ga.	4'-4"	4'-0"	6'-3"	1,000	3,000
FL-01-500	500	10 ga.	10 ga.	4'-4"	4'-0"	11'-2"	1,600	4,750
FL-01-750	750	10 ga.	10 ga.	4'-4"	4'-0"	16'-2"	2,200	6,450
FL-02-500	500	10 ga.	10 ga.	5'-7"	5'-3"	6'-3"	1,800	4,900
FL-02-750	750	10 ga.	10 ga.	5'-7"	5'-3"	8'-8"	2,300	6,150
FL-02-1000	1,000	10 ga.	10 ga.	5'-7"	5'-3"	11'-2"	2,800	7,450
FL-02-1500	1,500	10 ga.	10 ga.	5'-7"	5'-3"	16'-2"	4,250	10,550
FL-02-2000	2,000	10 ga.	10 ga.	5'-7"	5'-3"	21'-1"	5,400	13,300
FL-03-1000	1,000	7 ga.	7 ga.	6'-9"	6'-5"	7'-1"	2,650	7,400
FL-03-1500	1,500	7 ga.	7 ga.	5'-9"	6'-5"	10'-2"	2,800	9,750
FL-03-2000	2,000	7 ga.	7 ga.	6'-9"	6'-5"	13'-2"	4,650	11,800
FL-03-3000	3,000	7 ga.	7 ga.	6'-9"	6'-5"	19'-2"	6,400	16,100
FL-03-4000	4,000	7 ga.	7 ga.	6'-9"	6'-5"	25'-1"	8,100	20,200
FL-04-2000	2,000	1/4"	1/4"	8'-4"	8'-0"	8'-6"	5,900	13,300
FL-04-3000	3,000	1/4"	1/4"	8'-4"	8'-0"	12'-2"	7,900	17,450
FL-04-4000	4,000	1/4"	1/4"	8'-4"	8'-0"	16'-2"	9,800	21,350
FL-04-5000	5,000	1/4"	1/4"	8'-4"	8'-0"	19'-2"	11,250	24,550
FL-04-6000	6,000	1/4"	1/4"	8'-4"	8'-0"	23'-1"	13,250	28,700
FL-04-8000	8,000	1/4"	1/4"	8'-4"	8'-0"	30'-1"	16,700	36,050
FL-04-10000	10,000	1/4"	1/4"	8'-4"	8'-0"	37' 4"	20,150	43,400
FL-04-12000	12,000	1/4"	1/4"	8'-4"	8'-0"	44'-7"	23,600	50,750

COMPONENT DESCRIPTION

1. -PUMP WITH METER, HOOK, AND HOOD
2. FILTER ADAPTOR
3. FILTER ELEMENT
4. COAXIAL ADAPTOR
5. COAXIAL HOSE ASSEMBLY
6. VAPOR RECOVERY NOZZLE
7. OVERHEAD HOSE RETRACTOR
8. HOSE RETRACTOR POST
9. 4" COUPLING
10. FILL ADAPTOR
11. DROP TUBE
12. FILL CAP
13. VAPOR RECOVERY ADAPTOR
14. VAPOR RECOVERY CAP
15. PRESSURE/VACUUM VENT VALVE
16. EMERGENCY VENT
17. LEVEL GAGE
18. DECAL KIT

Notes:

A minimum of 6 inches of proprietary insulating material between the interior holding tank and the exterior containment tank.

Exhibit 2

Executive Order G-70-132-A

Trusco Tank, Inc., Supervault Aboveground Gasoline Tank Filling/Dispensing Vapor Recovery System

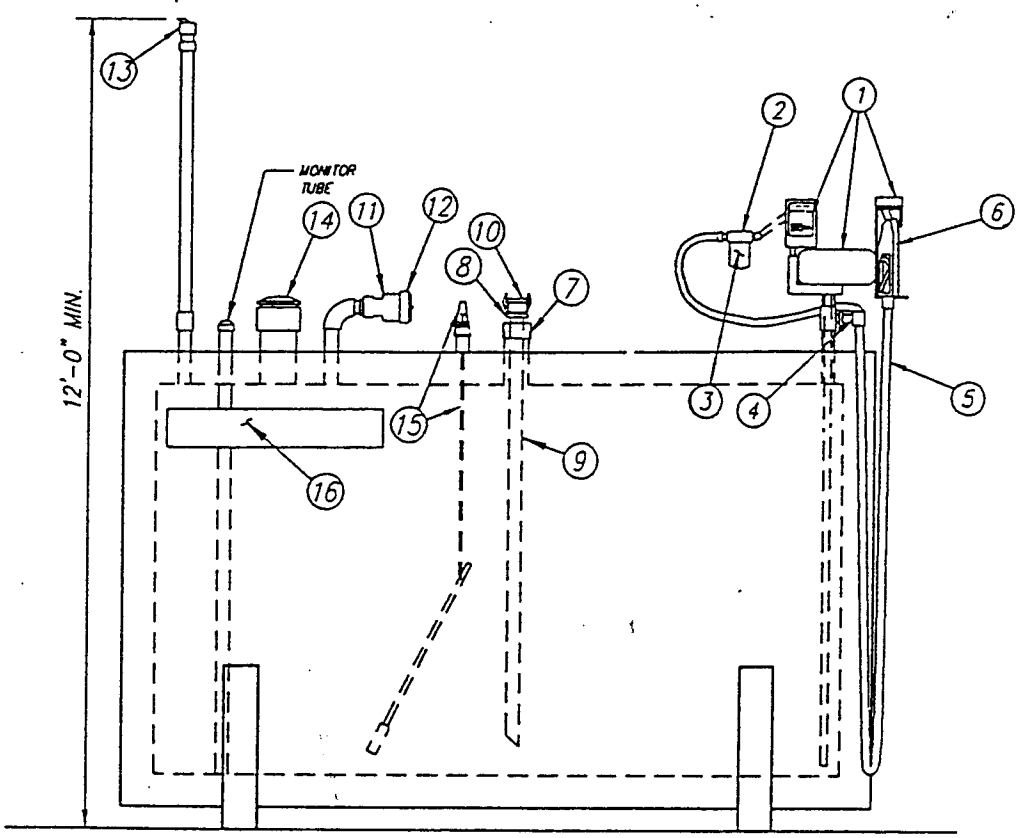

TANK MODEL NUMBER	NOMINAL CAPACITY	PRIMARY TANK THICKNESS	OUTER TANK THICKNESS	OVERALL HEIGHT (H)	OVERALL WIDTH (D)	OVERALL LENGTH (L)	TANK WEIGHT w/o INSULATION (lbs.)	TANK WEIGHT w/ INSULATION (lbs.)
FL-01-250	250	10 ga.	10 ga.	4'-4"	4'-0"	6'-3"	1,000	3,000
FL-01-500	500	10 ga.	10 ga.	4'-4"	4'-0"	11'-2"	1,600	4,750
FL-01-750	750	10 ga.	10 ga.	4'-4"	4'-0"	16'-2"	2,200	6,450
FL-02-500	500	10 ga.	10 ga.	5'-7"	5'-3"	6'-3"	1,800	4,900
FL-02-750	750	10 ga.	10 ga.	5'-7"	5'-3"	8'-8"	2,300	6,150
FL-02-1000	1,000	10 ga.	10 ga.	5'-7"	5'-3"	11'-2"	2,800	7,450
FL-02-1500	1,500	10 ga.	10 ga.	5'-7"	5'-3"	16'-2"	4,250	10,550
FL-02-2000	2,000	10 ga.	10 ga.	5'-7"	5'-3"	21'-1"	5,400	13,300
FL-03-1000	1,000	7 ga.	7 ga.	6'-9"	6'-5"	7'-1"	2,650	7,400
FL-03-1500	1,500	7 ga.	7 ga.	6'-9"	6'-5"	10'-2"	2,800	9,750
FL-03-2000	2,000	7 ga.	7 ga.	6'-9"	6'-5"	13'-2"	4,650	11,800
FL-03-3000	3,000	7 ga.	7 ga.	6'-9"	6'-5"	19'-2"	6,400	16,100
FL-03-4000	4,000	7 ga.	7 ga.	6'-9"	6'-5"	25'-1"	8,100	20,200
FL-04-2000	2,000	1/4"	1/4"	8'-4"	8'-0"	8'-6"	5,900	13,300
FL-04-3000	3,000	1/4"	1/4"	8'-4"	8'-0"	12'-2"	7,900	17,450
FL-04-4000	4,000	1/4"	1/4"	8'-4"	8'-0"	16'-2"	9,800	21,350
FL-04-5000	5,000	1/4"	1/4"	8'-4"	8'-0"	19'-2"	11,250	24,550
FL-04-6000	6,000	1/4"	1/4"	8'-4"	8'-0"	23'-1"	13,250	28,700
FL-04-8000	8,000	1/4"	1/4"	8'-4"	8'-0"	30'-1"	16,700	36,050
FL-04-10000	10,000	1/4"	1/4"	8'-4"	8'-0"	37' 4"	20,150	43,400
FL-04-12000	12,000	1/4"	1/4"	8'-4"	8'-0"	44'-7"	23,600	50,750

COMPONENT DESCRIPTION

1. PUMP WITH METER, HOOK, AND HOOD
2. FILTER ADAPTOR
3. FILTER ELEMENT
4. COAXIAL ADAPTOR
5. VENTURI TYPE COAXIAL HOSE ASSEMBLY
6. VAPOR RECOVERY NOZZLE
7. 4" COUPLING
8. FILL ADAPTOR
9. DROP TUBE
10. FILL CAP
11. VAPOR RECOVERY ADAPTOR
12. VAPOR RECOVERY CAP
13. PRESSURE/VACUUM VENT VALVE
14. EMERGENCY VENT
15. LEVEL GAGE
16. DECAL KIT

Notes:

A minimum of 6 inches of proprietary insulating material between the interior holding tank and the exterior containment tank.

Exhibit 3

Executive Order G-70-132-A

Trusco Tank, Inc., Supervault Aboveground Gasoline Tank Filling/Dispensing Vapor Recovery System

Incorporated Phase I Vapor Recovery Components

Component	Manufacturer	Model
Fill Tube	Morrison	419
Fill Adaptor	OPW	633A
Fill Cap	OPW	634-BK
Vapor Adaptor	OPW	1611-AV
Vapor Cap	OPW	1711-T
PV Vent Valve	Hazlett	H-PVB-1

Incorporated Phase II Vapor Recovery Components

Component	Manufacturer	Model
Nozzle	OPW	11VF
Hose Retractor[1]	Pomeco	102-AG
Coaxial Hose 1)	Thermoid	Superlite
2)	Thermoid	Superlite-V
Coaxial Hose Adaptor	OPW	38-C

Notes:

1 Hose retractor not required when venturi-type coaxial hose used.

See Executive Order G-70-97-A (Exhibits 1, 2 & 3) and Executive Order G-70-142-A (Exhibits 1 & 2) for a listing of ARB certified Phase I two-point and coaxial vapor recovery equipment and components which may be used as an alternative to the equipment above.

See Executive Order G-70 series for ARB certified Phase II balance system vapor recovery equipment and components which may be used as an alternative to the equipment above.