This SOP is subject to
review and revision in 2015.

BAY AREA
AIR QUALITY
MANAGEMENT
DISTRICT

TECHNICAL SERVICES DIVISION

QUALITY ASSURANCE PROJECT PLAN

STANDARD OPERATING PROCEDURE

AIRMON SOP 211

THERMO 42

REVISION 211.2.00 08/27/2012

Glen Colwell, Manager Air Monitoring Section	Date	Mark Stoelting, QA Officer Technical Services Division	Date

Technical Services Division 939 Ellis Street San Francisco CA 94109

TABLE OF CONTENTS

SECTION **PAGE**

LIST OF APPENDIX 4

LIST OF FIGURES 4

1.0 PURPOSE 5

2.0 SUMMARY OF METHOD 5

3.0 DEFINITIONS 8

4.0 HEALTH AND SAFETY WARNINGS 9

5.0 CAUTIONS 9

6.0 INTERFERENCES AND LIMITATIONS 9

7.0 PERSONNEL QUALIFICATIONS AND RESPONSIBILITIES 9

8.0 EQUIPMENT AND SUPPLIES 10

9.0 PROCEDURES 10
- 9.1 Initial Setup 10
- 9.2 Acceptance Testing 12
- 9.3 Calibration 13
  - 9.3.1 Procedure: Manual calibration (including adjustments) 13
- 9.4 Auto-Calibration, 'Auto-Cals' 15
- 9.5 Service and Maintenance 16
  - 9.5.1 Procedure: Change inlet filter 18
  - 9.5.2 Procedure: Cooling fan filter servicing 18
  - 9.5.3 Procedure: Calculate converter efficiency: 19
  - 9.5.4 Procedure: Instrument Internal Cleaning 19
  - 9.5.5 Procedure: Capillary inspection and cleaning 19
  - 9.5.6 Procedure: Clean thermoelectric cooler fins 20
  - 9.5.7 Procedure: External pump rebuild 21
  - 9.5.8 Procedure: Ozone scrubber assembly replacement 22
- 9.6 Sample Collection 22
- 9.7 Sample Handling and Preservation 22
- 9.8 Sample Preparation and Analysis 22
- 9.9 Troubleshooting 22
- 9.10 Computer Hardware and Software 26

10.0 DATA AND RECORDS MANAGEMENT 27

11.0 QUALITY CONTROL AND QUALITY ASSURANCE 28
11.1 Quality Control 28
11.2 Quality Assurance 29

12.0 AUTHORS 30

13.0 REFERENCES 30

LIST OF APPENDIX

APPENDIXES 31
14.1 Appendix A: 42 Specifications 31
14.2 Appendix B: Thermo 42C Diagnostic Flags 32
14.3 Appendix C: Thermo 42i Diagnostic Flags 33

LIST OF FIGURES

FIGURE 1: THERMO 42C FLOW SCHEMATIC 6

FIGURE 2: THERMO 42C FRONT PANEL 6

FIGURE 3: THERMO 42I FLOW SCHEMATIC 7

FIGURE 4: THERMO 42I FRONT PANEL 7

FIGURE 5: THERMO 42C REAR PANEL 12

FIGURE 6: THERMO 42I REAR PANEL 12

FIGURE 7: SUGGESTED MAINTENANCE SCHEDULE 16

FIGURE 8: INTERNAL COMPONENTS 42C 17

FIGURE 9: INTERNAL COMPONENTS 42I 18

FIGURE 10: THERMO FISHER SCIENTIFIC, INC. 20

FIGURE 11: BAAQMD STATION/SHELTER TEMPERATURE CRITERIA 28

FIGURE 12: BAAQMD QC LIMITS FOR NO/NOX/NO2 29

FIGURE 13: BAAQMD MQO'S FOR NO/NOX/NO2 29

FIGURE 14: BAAQMD INTRNL AUDIT ACCEPT. CRITERIA FOR NO/NOX/NO2 29

1.0 PURPOSE

This Standard Operating Procedure (SOP) describes the installation, setup, general operation, calibration, maintenance, data collection, troubleshooting and repair of the Thermo Fischer Scientific, Inc. (THERMO) 42i or Thermo Environmental, Inc. Model 42C NO/NOx/NO2 analyzer. **NOTE**: This SOP supplements the procedures located in the appropriate THERMO Instrument Manual.

2.0 SUMMARY OF METHOD

The Model 42C and 42i are both based on the principle that nitric oxide (NO) and ozone (O_3) react to produce a characteristic luminescence with the intensity linearly proportional to the NO concentration. **NOTE**: Please refer to the appropriate THERMO Instrument manual for a further explanation.

The THERMO Model 42 is designated as a Reference Method by the United States Environmental Protection Agency (EPA) for the measurement of ambient concentrations of NO/NOx/NO2 pursuant with the requirements defined in the Code of Federal Regulations (CFR), Title 40, and Part 53.

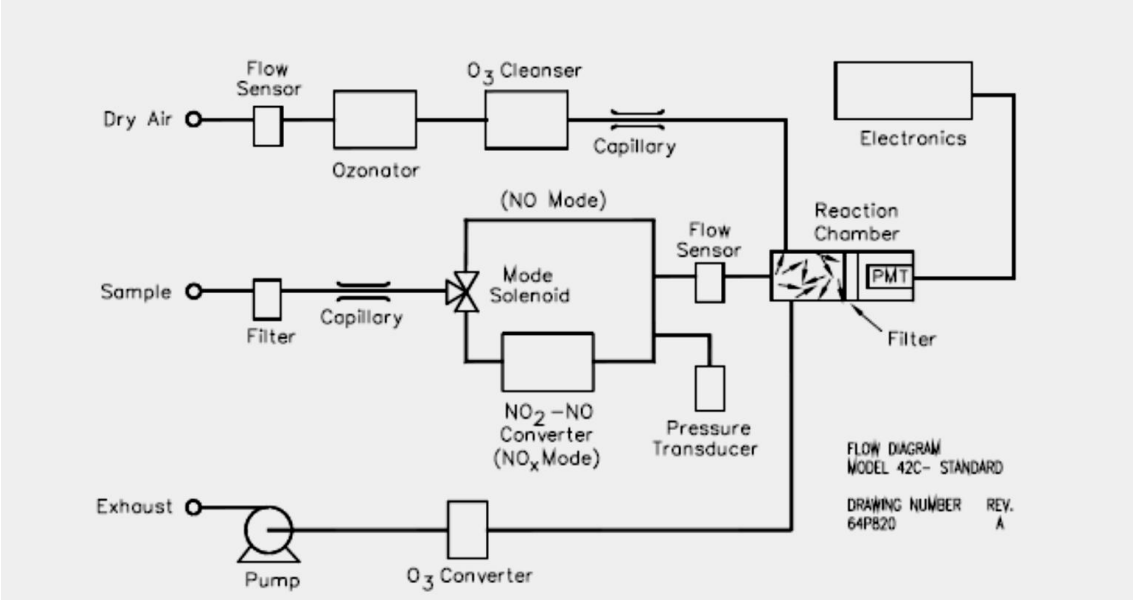

Figure 1: THERMO 42C Flow Schematic

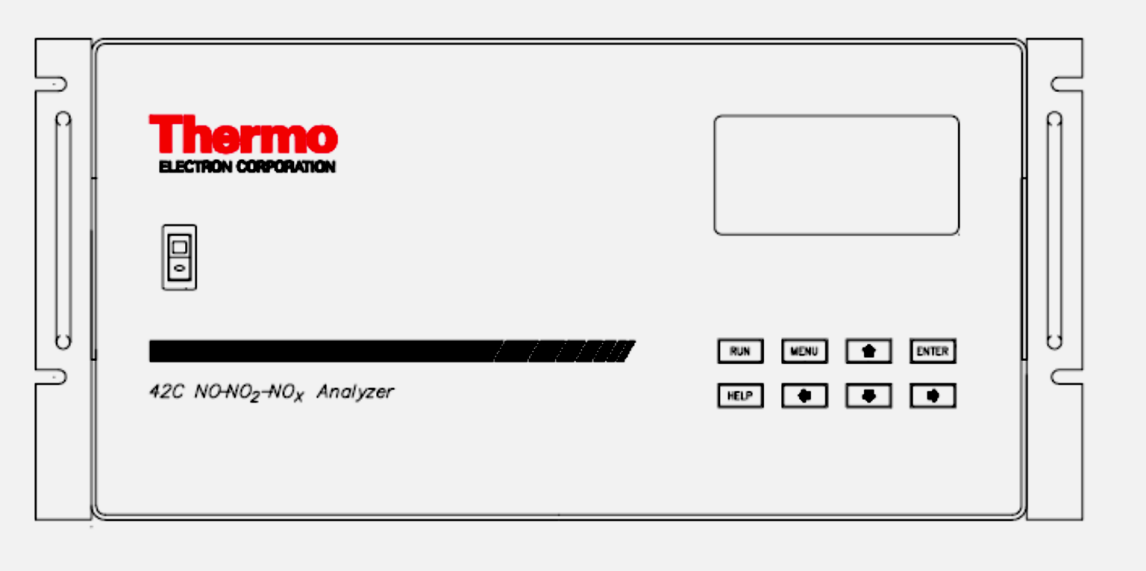

Figure 2: THERMO 42C Front Panel

©Thermo Fisher Scientific, Inc.

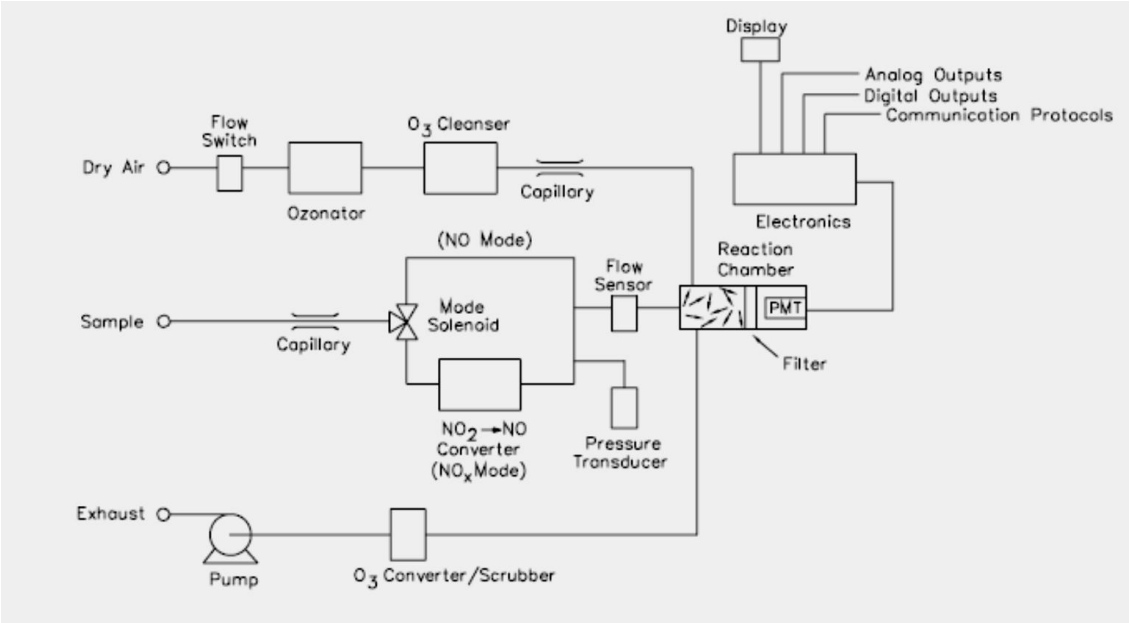

Figure 3: THERMO 42i Flow Schematic

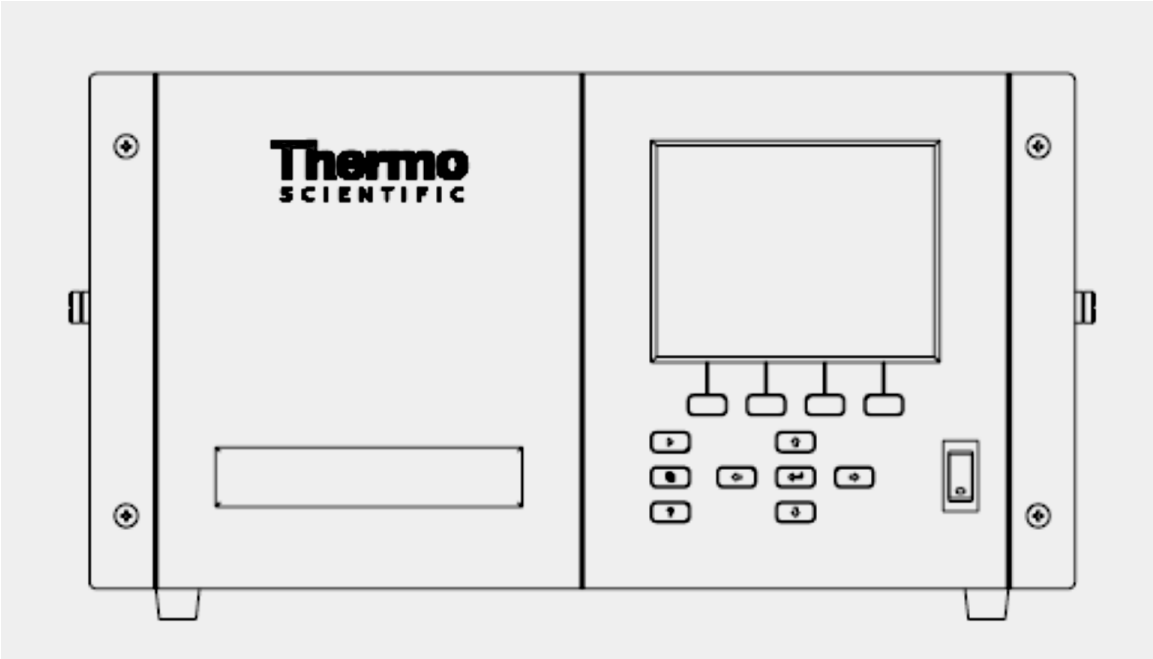

Figure 4: THERMO 42i Front Panel

©Thermo Fisher Scientific, Inc.

3.0 DEFINITIONS

AQIS	Air Quality Instrument Specialist
BAAQMD	Bay Area Air Quality Management District
BKG	Background
CARB	California Air Resources Board
CFR	Code of Federal Regulations
COEF	Coefficient
DAS	Data Acquisition System
DMS	Data Management System
EPA	Environmental Protection Agency
GPT	Gas Phase Titration
MQO	Measurement Quality Objective
NAAQS	National Primary And Secondary Ambient Air Quality Standards
NIST	National Institute of Standards and Technology
NO	Nitric oxide
NO2	Nitrogen dioxide
NOx	Oxides of nitrogen (except NO2)
PMT	Photo Multiplier Tube
ppb	Parts per billion
ppm	Parts per million
QA	Quality Assurance
QAPP	Quality Assurance Project Plan
QC	Quality Control
SOP	Standard Operating Procedure
THERMO	Thermo Fischer Scientific, Inc.

4.0 HEALTH AND SAFETY WARNINGS

NOTE: Consult the THERMO Instrument Manual 'Safety Precautions' Sections for Preventive Maintenance, Troubleshooting, and Servicing in Chapters 5, 6, and 7, respectively.

5.0 CAUTIONS

NOTE: Consult the THERMO Instrument Manual 'Safety Precautions' Sections for Preventive Maintenance, Troubleshooting, and Servicing in Chapters 5, 6, and 7, respectively.

6.0 INTERFERENCES AND LIMITATIONS

Reactive materials, solvents and excessive particulates in the probe and sample inlet tubing could be possible interferences. Monitoring should be temporarily stopped if local sources of potential interferences are detected (i.e. paving, painting, etc.). Probe inlet tubing and manifold should be cleaned if contamination is suspected.

Lower Detection Limit: 0.40 ppb (60 second averaging time)

7.0 PERSONNEL QUALIFICATIONS AND RESPONSIBILITIES

Installation, operation, maintenance, repair or calibration of the instrument and all support equipment should only be performed by properly trained personnel. Personnel should meet all minimum BAAQMD requirements and qualifications for an Air Quality Instrument Specialist (AQIS) I or II, Senior AQIS, and/or Supervising AQIS.

- The station operator AQIS is responsible for the operation and oversight of the instrument and all support equipment. The operator shall complete any required or recommended maintenance, minor repairs and/or occasional calibration of the instrument and all support equipment. The station operator AQIS is responsible for all DMS data review and validation. The station operator AQIS may occasionally install or replace an instrument or support equipment. The Senior AQIS and Supervisor AQIS complete major installations, repairs and calibrations.

- BAAQMD MQA personnel manage the DMS and complete all final data review and submittal.

- BAAQMD PEG staff may conduct periodic performance and/or system's audits.

- CARB staff may conduct periodic performance and/or system's audits.

- EPA staff may conduct periodic performance and/or system's audits.

8.0 EQUIPMENT AND SUPPLIES

The THERMO 42C or 42i are both normally installed and operated with the following equipment:

- THERMO Instrument Manual
- Instrument bench or instrument rack. **NOTE**: Rack installation requires the use of the appropriate instrument sliders securely attached to the analyzer!
- Grounded 3-wire plug
- 10-micron Teflon filters and a Teflon filter holder assembly with appropriate fittings
- ¼" OD Teflon sample line tubing. The length of the tubing should be less than 10 feet
- glass manifold
- Inlet probe and probe line material installed following EPA siting requirements
- external pump –Dual-head Thomas vacuum pump
- charcoal ozone scrubber assembly
- Calibrator with GPT capability
- Zero-air supply
- Certified multi-blend cylinder with NO/NOx component and regulator
- 1/8" SS tubing (from cylinder to the calibrator) and appropriate fittings; **NOTE**: All gas delivery connections should be leak tested upon installation!
- Data Acquisition System (DAS) with appropriate cables and adaptors (RS-232, DB9, CAT-5, etc.) with connection to the District's Data Management System (DMS); **NOTE**: Please refer to Section 10 of this SOP, "*DATA AND RECORDS MANAGEMENT"*

9.0 PROCEDURES

9.1 INITIAL SETUP

NOTE: Please refer to the appropriate THERMO Instrument Manual for further information.

1. Inspect a new analyzer for any external damage. Carefully remove the instrument cover and check for any internal damage or missing parts. Check that all connectors and printed circuit boards are firmly attached. Remove any shipping screws and packing materials.

NOTE: For most applications, instruments must be installed and operated following EPA requirements for siting and location.

2. Connect a sample line and external filter assembly to the **SAMPLE IN** bulkhead on the rear panel of the analyzer. (Figures 5 and 6)

3. Disconnect internal pump**;** connect a charcoal scrubber assembly to the **EXHAUST** bulkhead; connect the other end to an external pump. The line should be ¼ " OD. The length of the exhaust line should be as short as possible. Verify that there is no restriction in this line.
4. Plug the analyzer into an outlet of the appropriate voltage and frequency.
5. Press the power switch to "ON."
6. Adjust all appropriate analyzer settings for range, averaging time, alarms, internal data logging and communications:
    a. Range: NO = 1.000 ppm; NO2 = 0.5 ppm
    b. Average Time 60 seconds
    c. SPAN COEF = 1.000, BKG COEF = 0.000
    d. Pressure Compensation ON
    e. Temperature Compensation ON
    f. 42C and 42i: data-logging and communications. Contact Senior AQIS or Supervisor AQIS for instructions
7. **NOTE**: If installing at a station, connect to a DAS; if the DAS is connected to the DMS, move the instrument to the appropriate site location and activate the instrument.
8. Allow at least one hour for the analyzer to stabilize;
9. **NOTE: If installed at a station, complete a full calibration**.
10. Enter any pertinent information into the appropriate DMS instrument e-log.

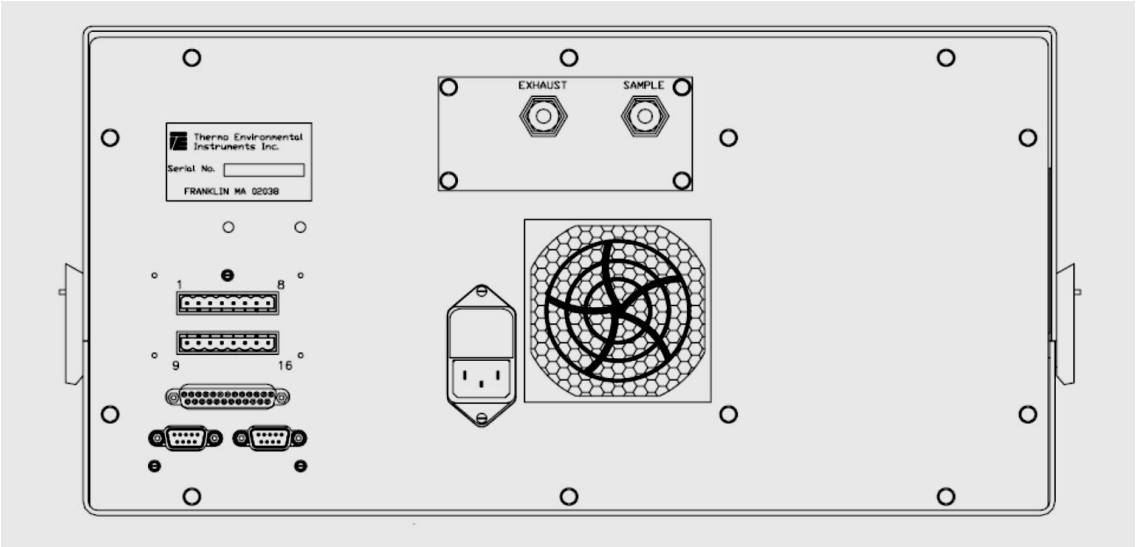

Figure 5: THERMO 42C Rear Panel

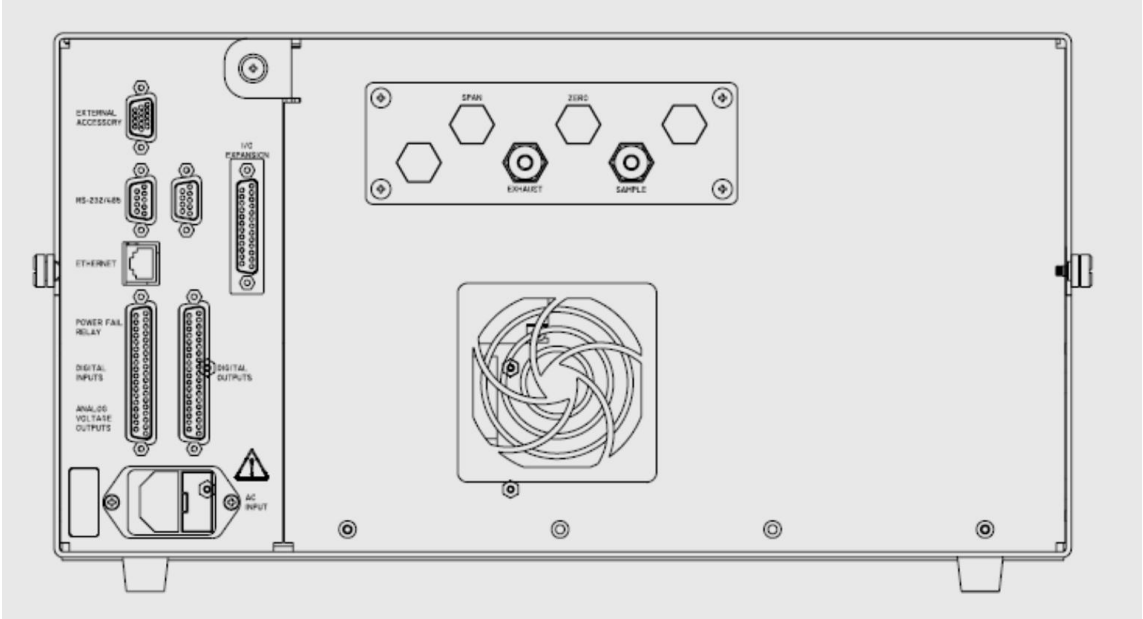

Figure 6: THERMO 42i Rear Panel

©Thermo Fisher Scientific, Inc.

9.2 ACCEPTANCE TESTING

NOTE: Please refer to the appropriate THERMO Instrument Manual for further information

Staff will conduct acceptance testing on new instruments prior to deployment in the field. Setup analyzer following steps in Section 9.1 of this SOP in a mock station setting which includes an ultra-pure zero-air supply, a stable calibrator, a stable calibrated O3 analyzer, another stable calibrated NO/NOx/NO2 analyzer and a DAS connected to the DMS.

1. Calibrate analyzer (Section 9.3 of this SOP)
2. Check NO/NOx linearity by running a gas span, mid-high, mid-low, and precision level calibrations, allowing at least 20 minutes for all points;
3. Check NO2 linearity by running a GPT span, mid-high, mid-low, and precision level calibrations, allowing at least 20 minutes for all points;
4. Calculate the converter efficiency at all points as follows:

$$\text{C. E.} = \left\{ \frac{\text{(Delta NO - Delta NOx)}}{\text{(Delta NO)}} \right\} * 100$$

5. If the converter efficiency is < 96%, check converter operational parameters, etc. re-run points again and re-calculate; replace converter with a known good one;
6. Setup to operate for a minimum of 1 week in a simulated station setup running automated nightly calibrations;
7. Check 1-minute and hourly data and parameters for stability, repeatability, flags and/or alarms, or any other atypical performance;
8. Enter any pertinent information into the appropriate DMS instrument e-log;
9. New instruments should have a BAAQMD S/N assigned.

9.3 CALIBRATION

NOTE: Please refer to the appropriate THERMO Instrument Manual for further information.

District policy and EPA regulations typically require a full calibration when the instrument is newly installed, moved, repaired, interrupted for more than a few days, or when there is a span or zero calibration response ≥ +/- 3 % for NO2 and 5% for NO/NOx or a QC 1-point precision shift by ≥ +/- 7 % for NO2 and 10% for NO/NOx.

9.3.1 Procedure: Manual calibration (including adjustments)

1. Set BKG COEF's = 0.000 and SPAN COEF = 1.000 for all new instruments.
2. Start a zero-air calibration.
3. Allow the analyzer to sample zero air for a minimum of 15 minutes.
4. If the analyzer is indicating < +/- 3.0 ppb for any values no further adjustment is necessary.
5. If the analyzer is indicating > +/- 3.0 ppb for any values then a zero calibration is required.

6. When calibrating the analyzer zero, adjust NO and NOx "BKG" under Main menu Calibration Factors to obtain zero response. **NOTE**: To prevent NO2 zero response from reading negative, set the NOx "BKG" slightly higher than NO "BKG" by one or two ppb.
7. **OPTIONAL**: Start a gas span <u>or</u> start flow from a NIST traceable certified NO/NOx span cylinder (~ 0.800 ppm):
    a. Flush cylinder regulator
    b. Start flow to the analyzer through the analyzer's filter assembly introduced at low pressure and low flow (~30% greater than sampler flow rate)
    c. Ensure that the flow path from cylinder to the analyzer is vented to atmosphere using a suitable rotometer, Tee, and tubing rig
    d. Allow the analyzer to sample calibration or cylinder gas for a minimum of 15 minutes.
    e. If the NO/NOx value is <u>≤</u> +/- 5 % of the true concentration, no further adjustment is required.
    f. If the value is > +/- 5 %, <u>or</u> if the analyzer is new <u>or</u> recently repaired, adjust the PMT to match the true value; **NOTE**: The operator may elect to adjust the analyzer to NO/NOx values at this time and/or adjust during a GPT SPAN calibration
8. Start a GPT span calibration;
9. Allow the analyzer to sample GPT span calibration gas for a minimum of 15 minutes.
10. If the NO2 value is <u>≤</u> +/- 3 % of the true concentration, no further adjustment is required.
11. If the value is > +/- 3 %, <u>or</u> if the analyzer is new <u>or</u> recently repaired, a calibration is required; adjust the PMT voltage to bring in the true NO2 value;
    a. 42C:
        1 Place instrument into SERVICE Mode
        2 Remove cover;
        3 MENU<SERVICE < PMT SUPPLY to view current PMT setting
        4 Locate PMT adjustment potentiometer;
        5 Slowly adjust PMT potentiometer clock-wise/counter-clockwise while viewing PMT SUPPLY; **NOTE**: One volt PMT value adjustment usually adjusts span values ~ +/- 3-4 ppb.
        6 Allow readings to stabilize;
        7 **OPTIONAL**: After PMT adjustment, adjust NO/NOx COEF's to match true value.
        8 Replace cover;
        9 Disable SEVICE mode
        10 Place instrument into REMOTE mode;
        11 Record all pertinent information into the instrument e-log.
    b. 42i:
        1 Place instrument into SERVICE Mode
        2 MENU<SERVICE < PMT SUPPLY to view current PMT setting
        3 Slowly adjust PMT COUNTS value up/down while viewing PMT SUPPLY; Press ENTER to save; **NOTE**: One volt PMT value adjustment usually adjusts span values ~ +/- 3-4 ppb.
        4 Allow readings to stabilize;

5 **OPTIONAL**: After PMT adjustment, adjust NO/NOx COEF's to match true value.
6 Disable SEVICE mode
7 Record all pertinent information into the instrument e-log.

12. Once the analyzer is calibrated, the operator may elect to run mid-high, mid-low and/or precision level calibration points to check linearity.
13. Stop the calibration. Allow the readings to stabilize. Check that the analyzer is back in the **REMOTE** mode.
14. Record all pertinent information into the instrument e-log.
15. Visually check the entire system prior to leaving the station to verify correct operation!

9.4 AUTO-CALIBRATION, 'AUTO-CALS'

At most District air-monitoring locations, nightly automated calibrations (auto cals) are completed on a regular schedule. This may include the completion of precision, mid-low, mid-high, span and zero level calibrations on a rotational basis following all EPA requirements. The operator is responsible for reviewing nightly auto-cal results on the District DMS and taking any appropriate actions if the auto-cal results are unacceptable. **NOTE**: Please refer to Section 10 of this SOP, "*DATA AND RECORDS MANAGEMENT*"; and Section 11 of this SOP, "*QUALITY CONTROL AND QUALITY ASSURANCE*".

1. Log onto DMS.
2. Check that the analyzer nightly auto cal response is within its recommended Quality Control (QC) limits. If the instrument response is outside the specified quality control limit, the source of the problem is to be investigated and corrected. Violation of a QC limit does not require data action as long as an MQO is not also exceeded.
3. The operator will adjust the analyzer if the nightly auto-cal results or manual calibrations results are outside of the acceptable BAAQMD QC limits. QC limits are developed to provide an early warning of instrument problems prior to the exceedance of a Measurement Quality Objective (MQO).
4. If any MQO's are exceeded, the source of the problem is to be investigated and corrected and the operator shall invalidate all suspect or questionable 1-minute DMS data **unless** the error is a result of other equipment (i.e., malfunctioning calibrator, power-failure, etc.) **and** the operator has demonstrated that the instrument is functioning within its specified operating parameters.
5. Record all pertinent information into the instrument e-log.

9.5 SERVICE AND MAINTENANCE

The operator shall perform all recommended or required diagnostic checks, service and maintenance. The following table is a suggested general guideline for service and maintenance.

NOTE: Please refer to the appropriate THERMO instrument manual further information:

Maintenance Item	Suggested Period	SOP Section
Change inlet filter	**2-3 weeks**	9.5.1
Cooling fan filter servicing	**Monthly**	9.5.2
Check converter efficiency	**Quarterly**	9.5.3
Instrument internal cleaning	**6 months**	9.5.4
Capillary inspection and cleaning	**6 months**	9.5.5
Clean Thermoelectric cooler fins	**6 months**	9.5.6
Pump rebuild	**Annually***	9.5.7
Full calibration	**Annually***	9.3
Charcoal ozone scrubber replacement	**2 years***	9.5.8

*These items may be performed more often as required.

Figure 7: Suggested Maintenance Schedule

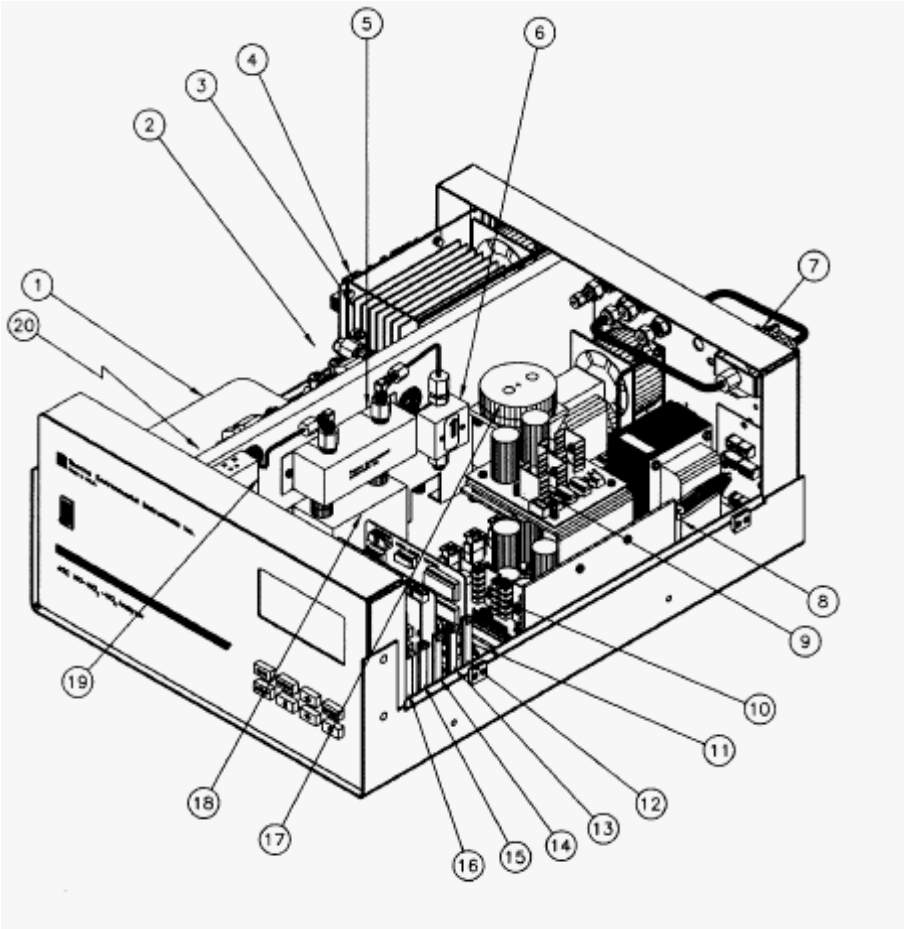

NO.	DESCRIPTION
1	NO_2 TO NO CONVERTER
2	MODE SOLENOID
3	PMT COOLER
4	TEMPERATURE CONTROL BOARD
5	OZONATOR
6	OZONE FLOW SENSOR
7	SAMPLE PARTICULATE FILTER
8	TRANSFORMER
9	OZONATOR BOARD
10	POWER SUPPLY BOARD
11	MOTHER BOARD
12	C-LINK BOARD
13	OPTIONAL BOARD (I.C., I/O BOARD)
14	D/A BOARD
15	A/D BOARD
16	PROCESSOR BOARD
17	PUMP
18	OZONATOR TRANSFORMER
19	INPUT BOARD
20	SAMPLE FLOW SENSOR

Figure 8: Internal Components 42C

©Thermo Fisher Scientific, Inc.

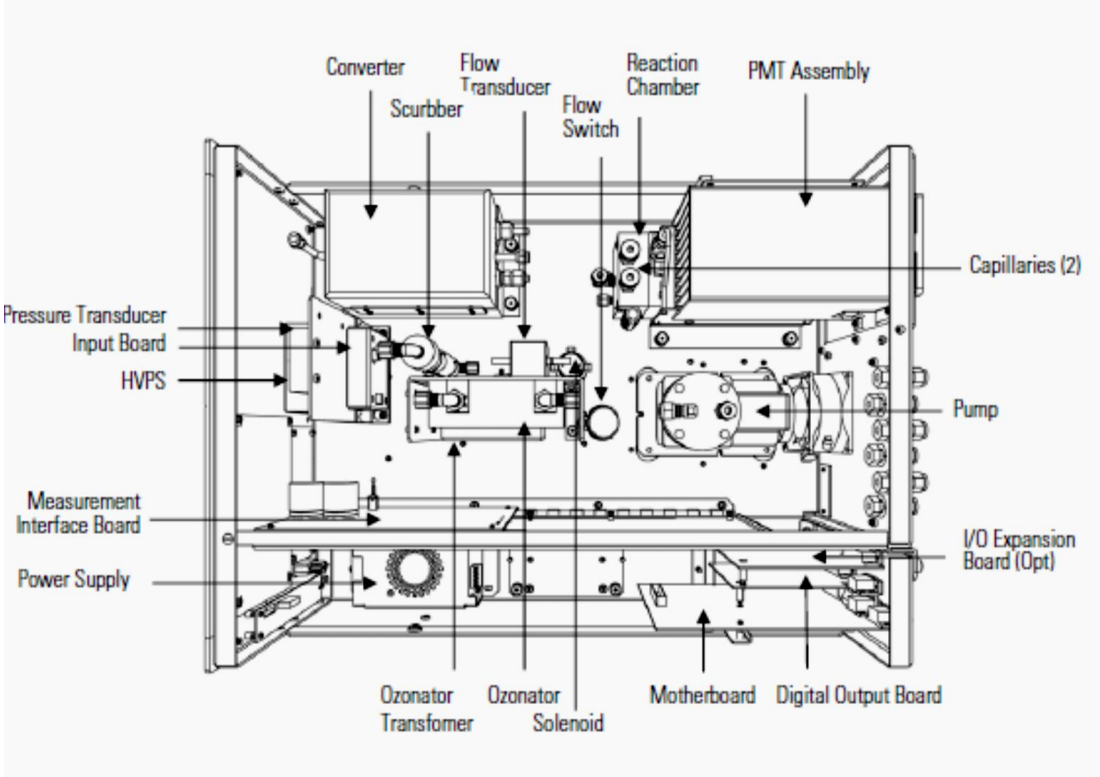

Figure 9: Internal Components 42i

©Thermo Fisher Scientific, Inc.

9.5.1 Procedure: Change inlet filter

An in-line Teflon filter protects the analyzer from dirt and contaminants. Filters should be changed on a regular schedule. Use 10.0 Teflon filters.

1. Carefully open filter holder assembly
2. Remove old filter; inspect filter holder assembly for any loose deposits; clean with tissue paper; inspect filter holder fittings; replace any fittings if damaged.
3. Replace with new filter;
4. Carefully close filter holder assembly;
5. Enter the appropriate information into the DMS e-log for the instrument

9.5.2 Procedure: Cooling fan filter servicing

1. Remove the two fan guards from the fans and remove the filters.

2. Flush the filters with warm water and let dry (a clean, oil-free purge will help the drying process) or blow the filters clean with compressed air.
3. Re-install the filters and fan guards.
4. Enter the appropriate information into the DMS e-log for the instrument

9.5.3 Procedure: Calculate converter efficiency:

1. Calculate the converter efficiency 4x year as follows using 1-minute DMS data from recent auto-cal or manual calibration:

$$C.\ E. = \left\{ \frac{(\text{Delta NO - Delta NOx})}{(\text{Delta NO})} \right\} * 100$$

2. If the converter efficiency is < 96%, check converter operational parameters, etc. re-run points again and re-calculate; replace converter if necessary;

9.5.4 Procedure: Instrument Internal Cleaning

1. Disable the appropriate DAS channel.
2. Turn the instrument OFF and unplug the power cord.
3. Carefully open instrument cover;
4. Vacuum the instrument interior;
5. Carefully blow out remainder of dust with compressed air;
6. Carefully replace instrument cover;
7. Plug in analyzer and switch on.
8. After readings have stabilized, enable the appropriate DAS channel.
9. Enter the appropriate information into the DMS e-log for the instrument

9.5.5 Procedure: Capillary inspection and cleaning

1. Disable the appropriate DAS channel.
2. Turn the instrument OFF and unplug the power cord.
3. Remove the instrument cover.
4. Locate the capillary holders.

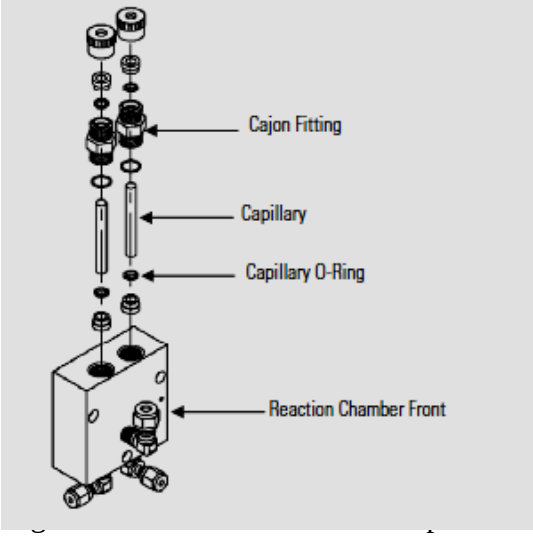

FIGURE 10: ©THERMO FISHER SCIENTIFIC, INC.

5. Remove the Cajon® fitting(s) from the reaction chamber body using a
6. 5/8-inch wrench being careful not to lose the ferrule or O-ring.
7. Remove the glass capillaries, ferrule, and O-ring. Inspect O-ring for cuts or abrasion, and replace as necessary.
8. Check capillary for particulate deposits. Clean or replace as necessary.
9. Replace capillary in reaction chamber body, making sure the O-ring is around the capillary before inserting it into the body.
10. Replace Cajon® fitting. Note that the Cajon® fitting should be tightened slightly more than hand tight.
11. Reconnect tubing to top of fittings, being careful to insert ferrule and O-ring properly, and tighten knurled nut finger tight.
12. Carefully replace instrument cover;
13. Plug in analyzer and switch on.
14. After readings have stabilized, enable the appropriate DAS channel.
15. **NOTE**: The operator should check and/or re-calibrate the analyzer after servicing capillaries.
16. Enter the appropriate information into the DMS e-log for the instrument

9.5.6 Procedure: Clean thermoelectric cooler fins

1. Disable the appropriate DAS channel.
2. Turn the instrument off and unplug the power cord.
3. Remove the instrument cover.
4. Locate the PMT cooler (Figure 8 and 9).

5. Blow off the cooler fins using clean pressurized air. It may be more convenient to vacuum the cooler fins. In either case, make sure that any particulate accumulation between the fins has been removed.
6. If necessary, use a small brush to remove residual particulate accumulation.
7. Carefully replace instrument cover;
8. Plug in analyzer and switch on.
9. After readings have stabilized, enable the appropriate DAS channel.
10. Enter the appropriate information into the DMS e-log for the instrument

9.5.7 Procedure: External pump rebuild

Most stations use an external Thomas dual-headed vacuum pump. The pump should be checked and re-built annually or when flow/vacuum issues arise. The pump should pull at least 22 "Hg and be steady. Other pumps may be used, in which case, refer to the instructions that are provided with the pump rebuild kit. Noisy bearings should be replaced. Pumps that run hot, are excessively noisy, or fail to deliver a steady vacuum should be replaced.

NOTE: Leaks in the charcoal canister assembly can cause flow/vacuum issues. Check if suspect. Repair or replace if leaks are detected. Replace the charcoal at least every two years

OPTIONAL: In order to decrease instrument down-time, the operator may elect to switch in a new or rebuilt pump.

NOTE: The operator should check and/or re-calibrate the analyzer after a pump rebuild or replacement.

1. Disable the appropriate DAS channel.
2. Unplug pump; disconnect the ¼" line from the pump.
3. Place a mark on the pump heads to indicate proper re-positioning.
4. Remove the 8 screws holing the pump top valve assembly; remove the top valve assembly.
5. Remove and inspect both pump diaphragms. If cracked, hardened, torn or damaged, replace both diagrams.
6. Remove valve plate assemblies from the top valve plate, noting alignment.
7. Carefully inspect both plate assemblies. Remove the flapper valves and clean. Replace if corroded or damaged. Inspect the gasket. Replace if damaged.
8. Replace the valve plate assemblies to the top valve plate, noting alignment.
9. Replace the pump top valve assembly;
10. Clean out windings with compressed air.
11. Plug in pump. Check with vacuum gauge.
12. Re-connect the ¼" line to the pump.
13. **NOTE**: The operator should check and/or re-calibrate the analyzer after servicing capillaries.
14. Re-enable the appropriate DAS channel.
15. Enter the appropriate information into the DMS e-log for the instrument

9.5.8 Procedure: Ozone scrubber assembly replacement

Change the ozone scrubber assembly if pump life is severely diminished, or every 2 years at a minimum. An ozone scrubber assembly protects the operator and pump from high concentrations of ozone present in the analyzer exhaust stream.

1. Disable the appropriate DAS channel;
2. Carefully remove scrubber and dissemble;
3. Replace charcoal with new lab-grade pre-washed charcoal; Carefully re-assemble scrubber;
4. **OPTIONAL**: If leaks are suspected, replace fittings; if leaks are still suspected, replace entire scrubber.
6. Carefully re-install scrubber assembly;
7. Check analyzer for correct flow and pressure (under diagnostics or check DAS screen);
8. **NOTE**: The operator should check and/or re-calibrate the analyzer.
9. Re-enable the appropriate DAS channel.
10. Enter the appropriate information into the DMS e-log for the instrument

9.6 SAMPLE COLLECTION

NOTE: This SOP section is non-applicable and is left intentionally blank

9.7 SAMPLE HANDLING AND PRESERVATION

NOTE: This SOP section is non-applicable and is left intentionally blank

9.8 SAMPLE PREPARATION AND ANALYSIS

NOTE: This SOP section is non-applicable and is left intentionally blank

9.9 TROUBLESHOOTING

NOTE: Please refer to the appropriate THERMO Instrument Manual for further information.

NOTE: The operator should utilize the DMS to track and record various parameters (parametric data) which may be helpful for troubleshooting.

NOTE: 1-minute DMS data also includes instrument flags. For diagnostic flag codes, please refer to Appendix B and Appendix C of this SOP.

The operator should be aware of the following:

- Abnormal or out-of-range concentration values on instrument front display;

- ‘Alarm’ or alarm icon present on the analyzer front display;
- Abnormal or out-of-range diagnostic’s values (i.e., flow, pressure, chamber temperature, frequency, etc.);
- Abnormal or out-of-range DAS or DMS parametric data (i.e., flow, pressure, chamber temperature, frequency, etc.);
- Abnormal DAS or DMS instrument diagnostic flags;
- Abnormal or unusual auto-calibration and/or manual calibration results;
- Unusual sounds or changes in sounds over time (pump, kicker pump, etc.)

The operator should take the appropriate steps to resolve any instrument issue:

- Troubleshoot to identify faulty component or support equipment;
- Repair instrument or support equipment;
- Check and verify instrument’s performance; re-calibrate if needed;
- Review and invalidate any data that does not meet the criteria in Section 11 of this SOP;
- Review and validate <u>or</u> invalidate any questionable data as ‘suspect’;
- Maintain the appropriate DMS instrument and/or station e-log. The operator must enter the appropriate information after the completion of any repairs, maintenance, or adjustments. The operator should note any data gaps.
- In cases of instrument failure or inability to repair on-site, the operator should contact the Senior AQIS and/or the Supervising AQIS in order to coordinate replacement of the instrument.

The operator should be aware of the following:

SYMPTOM: Slowly dropping response to NO2 during an extended manual GPT:

- **NOTE**: Unstable calibrator O3 generation will result in a drifting NO2 response! Make certain that it is not a calibrator issue!
- Instrument/pump vacuum should be kept **<u>stable</u>** to reduce drifting NO/NO2 responses. Checking for leaks, flow restrictions and sample pump operation will locate source of unstable vacuum.
- Molybdenum Converter failure: watch trace over a period of an hour, response will continue to slowly decrease. If this happens, increase the converter temp from 325 to 340-350 to confirm converter efficiency drop. If this eliminates the downward drift, the converter molybdenum is almost consumed and should be replaced;
- Malfunctioning heater control 42C: Check temperature on display, it should be around 325°C. If it is very low, check to see if LED on temperature control board is on, off or blinking. If it is on or off continuously this is abnormal
- EPA requires that the converter efficiency calculated value is greater than 96%.

SYMPTOM: Instrument response flat lined:

- Unstable NO2 zero response may be due to a spent or bad ozone cleanser or ozonator failure
- If the ozonator is working and the instrument response if flat lined, suspect either PMT lamp or base failure;

SYMPTOM: Extremely high NO and NOx readings:

- Symptom of PMT lamp or base failure is high dark current.
- High dark current from the PMT will show up as extremely high NO and NOx readings (3000 + ppb) that cannot be adjusted down with cal auto function or through "BKG offset" procedure.
- With zero air flowing though the analyzer the BKG value should be less than 15.

SYMPTOM: NO or NOx calibration drifts down between calibrations:

- Ozonator flow, sample flow, reaction chamber temperature, Ballston filter clogging, ozonator orifice clogging and high voltage output from PMT power supply.
- Correct low flow conditions by cleaning orifices and replacing filters.
- Determine typical PMT voltage, and then check it to see if it drops down between calibrations. If it does, than the PMT power supply is failing.
- If the PMT voltage has to be adjusted up to higher and higher voltages to get enough sensitivity at each calibration then the PMT is failing.

SYMPTOM: Both low and slow response to NO span gas:

- An ozone cleanser that is spent, restricted or contaminated may cause both low and slow response to NO span gas. As much as 70ppb loss in NO span response has been noted.
- Replace the ozone cleanser.

SYMPTOM: Inability to generate ozone:

- If flow through this ozone generator orifice is restricted, drier efficiency drops allowing moist air into the ozonator.
- Ozonator output will drop
- Ozonator flow will drop due to orifice clog and NO response may also drop.
- There is also a Ballston filter in this flow path but it is not as likely to get clogged as the orifice.
- Instrument response will drop to zero for both NO and NO2 when the ozonator fails;
- Typical lifetime for an ozonator is three to five years. Check red LED on ozonator driver board to confirm that it is on. If red LED is not on, confirm that there is flow through the analyzer (the ozonator flow sensor switch requires a minimum of 50 cc flow to close;
- There is an override on the ozonator driver board to prevent the ozone lamp from firing when the sample pump is off or there is low flow. With cover off, there is a metal piston visible through the acrylic housing of the switch. When there is sufficient flow, metal

piston should be UP. Red LED on ozonator driver board should turn on when the metal piston completes the sensor circuit. There is delay of approx. 30 seconds before ozonator turns on when there has been a flow interruption;

- If ozonator discharge tube failure is suspected, a quick check is to temporarily remove the charcoal scrubber from the external sample pump inlet and sniff the pump exhaust for the smell of ozone (or route to the inlet of the THERMO 49 and watch for O3 response). If ozone is detected, the ozonator is functioning;
- **NOTE**: when the ozonator discharge tube fails, this can also cause the ozonator transformer to fail. If replacing the ozonator discharge tube does not bring back instrument response, and the electronics are good, replace the ozonator transformer.
- A faulty flow sensor (if equipped) can cause the analyzer to shut down if the indicated ozonator flow goes outside of the analyzer operating range. If the measured flow rate is OK and steady but the indicated flow on the display varies widely or is unusually high or low then the flow sensor is faulty.

SYMPTOM: PMT issues

- Maintaining station temp below 30 degrees C is critical to PMT cooler performance; high temp environments will overpower the PMT cooler.
- Check the PMT cooler fan on the rear of the instrument to confirm proper operation. If fan is not working, PMT cooling fins cannot dissipate heat.
- PMT normal supply voltage range is -650 to -850.
- Unstable PMT supply voltage will cause a noisy trace. Monitor PMT supply voltage under Service Mode – PMT SUPPLY.
- Changing a failed PMT should only be performed by Senior AQIS personnel in a darkened room with power off.
- Switching off the PMT voltage before turning off 42 may prevent expensive damage to the PMT when starting the analyzer. Be sure it is still switched off before turning on the analyzer. Switch off the ozonator along with the PMT voltage. This is performed under Instrument Controls.
- Symptoms of PMT cooler plate separation are elevated cooler temperature, noisy trace and/or drift from zero/span settings.
- Monitor PMT cooler temperature under Diagnostics menu – should read -2.5 to -3.5 degrees C. **NOTE**: THERMO 42i model the PMT cooler is set to run colder at -4.0 degrees C.

SYMPTOM: Flow/pressure issues:

- Instrument/pump vacuum should be kept **stable** to reduce drifting NO/NO2 responses.
- Checking for leaks, flow restrictions and sample pump operation will locate source of unstable vacuum.
- Pressure readings on the Diagnostic menu display are in Absolute units - 760 mm = atmospheric pressure = NO VACUUM.

- Nominal vacuum should be 200 mm Hg vacuum with a single head Thomas pump. Double head Thomas pumps should pull down to approx. 170 mm.
- Higher vacuum readings (closer to atmospheric pressure – less vacuum) will cause lower "NO" span responses, conversely lower vacuum readings will increase "NO" span responses.
- The exhaust from the analyzer contains ozone and is acidic. Use a charcoal scrubber assembly with Teflon fittings, pump with Teflon liners or diaphragms and stainless steel fittings on the external pump;

OTHER:

- Multiblend cylinders with SO2 may have some SO3 radicals present which may cause a spread between the NO span and NOx span values. (i.e. The NOx span value may be 3-5 ppb higher than the NO span value). The spread decreases at the NO concentrations decrease (i.e. 3-5 ppb a thigh span down to 0-1 ppb at precision.)
- To get more accurate NO2 values via GPT, adjust the PMT voltage to bring in the true NO2 values while running a manual NO2 span GPT.
- It may be helpful to calibrate the 42 using a NO span concentration from a check cylinder if there are some concerns about gas concentrations from the calibrator. Be sure to flush cylinder regulator (minimum 40 purges) before running cylinder gas and making adjustments.
- When reviewing auto cal data, check to see if NO2 is at zero when NO is at span concentration. This will indicate that the NOx has been calibrated properly.
- A few CARB people say that SO3 radicals convert NO to NO2. The spread decreases as the concentrations decreases. For example at the high span the spread may be 4-6ppb but at the precision level may only be at 0-1 ppb. The SO3 radical effect is more evident on the O3 analyzer.

9.10 COMPUTER HARDWARE AND SOFTWARE

The 42C or 42i is connected to a BAAQMD station DAS via its Serial RS-232 Port. The DAS collects 1-minute data. All 42i or 42C instrument parameters must be set accordingly. No further data calculations or reduction are required.

- DAS: The operator should be familiar with operation of the station's DAS and the DAS manual calibration script files
- DMS: Operator should be familiar with the operation of the DMS software including data review, auto-cal response data review, e-log entry, etc.
- iPort: The operator should be familiar with the use of THERMO iPort software

10.0 DATA AND RECORDS MANAGEMENT

- 1-minute concentration data (ppm) is collected by the station's DAS. The station DAS pushes data hourly to the BAAQMD DMS. Data is retained by the DMS for future review and usage.
- 1-minute analyzer parametric data are collected by the station's DAS. The station DAS pushes data hourly to the BAAQMD DMS. Data is retained by the DMS for future review and usage.
- Analyzer parametric data may include various instrument operating parameters such as flow rate, pressure, lamp temperature, instrument flags (**NOTE**: please refer to the appropriate THERMO instrument manual and Appendix B and C of this SOP for an explanation of diagnostic flags), etc. The operator is encouraged to use the instrument parametric data as an aid to data review and validation and for troubleshooting
- District staff are responsible for data and records management including oversight of data capture into a station DAS, data ingestion into the District DMS, data review and validation, and data retention.

The operator is responsible for the following:

- Review and validate <u>or</u> invalidate any data that does not meet the criteria in Section 11 of this SOP;
- Review and validate <u>or</u> invalidate any questionable data flagged as 'suspect' in DMS;
- Maintain the appropriate DMS instrument and/or station e-log. The operator must enter the appropriate information after the completion of any repairs, maintenance, or adjustments. The operator should note any data gaps. The operator may elect to manually collect data from the analyzer in the event of a DAS data collection error.

11.0 QUALITY CONTROL AND QUALITY ASSURANCE

Quality Control (QC) procedures include the completion of any required calibrations, service and maintenance. Quality Assurance (QA) procedures include the completion of any required audits.

11.1 QUALITY CONTROL

- The operator shall perform all recommended or required diagnostic checks, service and maintenance. Please refer to Section 9.5 of this SOP and the appropriate instrument manual for more information. Note in the appropriate e-log all checks, service and maintenance made to the analyzer or support equipment!
- Zero, span, mid-low span, mid-high span, and precision level auto-cals are automatically run nightly, alternating between the various auto-cals. If an auto-cal measurement is outside the specified QC (quality control) limit, the source of the problem is to be investigated and corrected. The operator will then adjust the analyzer by running a manual zero or span calibration. Note in the appropriate e-log all repairs, maintenance or adjustments made to the analyzer or support equipment!
- **NOTE**: QC limits are developed to provide an early warning of instrument problems prior to the exceedance of a Measurement Quality Objective (MQO). Violation of a QC limit does not require data action as long as an MQO is not also exceeded.
- **NOTE**: Do not adjust the analyzer while running a precision! The operator may only adjust the analyzer by running a zero and span, followed by another precision. Note in the appropriate e-log all adjustments made to the analyzer!
- If any MQO's are exceeded, the source of the problem is to be investigated and corrected **and** the operator shall invalidate all suspect or questionable 1-minute DMS data **unless** the error is a result of other equipment (i.e., malfunctioning calibrator, power-failure, etc.) **and** the operator has demonstrated that the instrument is functioning within its specified operating parameters.
- Hourly DMS data are manually invalidated by MQA if the station/shelter temperature range exceeds instrument certification limits. Data invalidations due to station temperature excursions are managed manually by MQA on a case-by-case basis per guidelines documented in Data Management SOP 601.

Parameter	Instrument	EPA Required Temp Range	BAAQMD Station/Shelter Out Of Range Criteria
NO, NOx, NO2	Thermo 42 (all)	15-35 °C	≤ 14.5 °C or ≥ 35.5 °C

Figure 11: BAAQMD Station/Shelter Temperature Criteria

- NOTE: Operator should include comments regarding shelter temperatures, sensors, controls, etc. in DMS e-logs. Data quality/validity resolution resides with MQA.

- NOTE: Ambient data correction and adjustment will be performed on hourly data only, by MQA, with justification provided by AQIS (i.e. pump pressure shifts, instrument adjustment, data shift or data drift caused by instrument component failure).

Parameter	Requirement	Frequency	Acceptance Criteria
Nitric Oxide, Nitrogen Dioxide, Nitrogen Oxides	Precision Check	Every 2 days	NO_2: ≤ ± 7% NO, NOx:≤ ± 10%
	Zero/Span Check	Every 2 days	≤ ± 3 ppb Zero NO_2: ≤ ± 3% Span diff NO, NOx: ≤ ± 5%

Figure 12: BAAQMD QC Limits for NO/NOx/NO2

Parameter	Requirement	Frequency	Acceptance Criteria
Nitric Oxide, Nitrogen Dioxide, Nitrogen Oxides [1]	Precision Checks	Every 2 days	≤ ± 10%
	Precision (QC Checks)	Annual	≤ 10%
	Bias (QC Checks)	Annual	≤ ± 10%
	Shelter Temperature	Hourly	15 -35 °C

Figure 13: BAAQMD MQO's for NO/NOx/NO2

[1]Precision and Bias MQO are taken from EPA QA Handbook Vol II, Appendix D, March 2008 revision.

11.2 QUALITY ASSURANCE

Quality Assurance activities include the following:

- District staff shall conduct performance and system's audits on a regular basis.
- CARB staff may conduct performance and/or systems audits
- EPA staff may conduct performance and/or systems audits

Parameter	Frequency	Acceptance Criteria
Nitric Oxide, Nitrogen Dioxide, Nitrogen Oxides	Semi-Annual	≤ ± 10%, Conv. Eff. > 96%

Figure 14: BAAQMD Internal Audit Acceptance Criteria for NO/NOx/NO2

12.0 AUTHORS

- Original Author: Gary Zoppo, 2/13/2006
- Revised By: Stan Yamaichi, 5/30/2008
- Revised By: Christopher Rumm, 06/20/2012; re-formatted SOP; added THERMO 'i' Model information

13.0 REFERENCES

- Code of Federal Regulations, Title 40, Part 53
- Code of Federal Regulation, Title 40, Part 58
- EPA QA Handbook Vol. II, Quality Assurance Handbook for Air Pollution Measurement Systems
- EPA Air Quality Standards, 40 CFR Part 50, NAAQS for Criteria Pollutants
- Thermo Fischer Environmental, Inc. Instrument Manual: \\cifs-02\sections\Air_Mon\Instrument Manuals\THERMO
- BAAQMD Data Mgt SOP 601 Gaseous Pollutants

14.0 APPENDIXES

14.1 APPENDIX A: 42 SPECIFICATIONS

SPECIFICATIONS YELLOW = RECOMMENDED SETTING

The Model 42 Chemiluminescence NO-NO_2-NO_x Analyzer meets EPA reference designation requirements when operated with the following:

- Range 0 - 0.05 to 1.0 ppm (NO/NOx = 1.000, NO2 = 0.500 ppm)
- Averaging Time: 60 seconds
- Line Voltage:
  - 90 to 110 VAC @ 50/60 Hertz
  - 105 to 125 VAC @ 50/60 Hertz
  - 210 to 250 VAC @ 50/60 Hertz
- Pressure Compensation on or off
- Temperature Compensation on or off
- Flow Rate 0.5 to 1 LPM
- Zero noise 0.2 ppb RMS (60 sec avg. time)
- Lower detectable limits:
  - 0.4 ppb (60 sec avg. time)
- Zero drift (24 hour) less than 1 ppb
- Span drift (24 hour) ± 1%
- Response time:
  - 80 sec (10 sec avg. time)
  - 110 sec (60 sec avg. time)
  - 320 sec (300 sec avg. time)
- Precision 1% of reading or 1 ppb (whichever is greater)
- Linearity:
  - ± 1% of full-scale < 100 ppm
  - ± 5% of full-scale > 100 ppm
- Sample flow rate 0.5 liters/min. (standard) or 1 liter/min. (optional)
- Operating temperature 20 - 30°C (may be safely operated over the range of 0 - 45°C)*
- Power requirements 90-110 VAC @ 50/60 Hz, 105-125 VAC @ 50/60 Hz; 100 Watts
- Physical dimensions:
  - 16.75 (W) X 8.62 (H) X 23” (D)
  - Weight 55 lbs.
- Outputs:
  - RS-232/485 Interface

14.2 APPENDIX B: THERMO 42C DIAGNOSTIC FLAGS

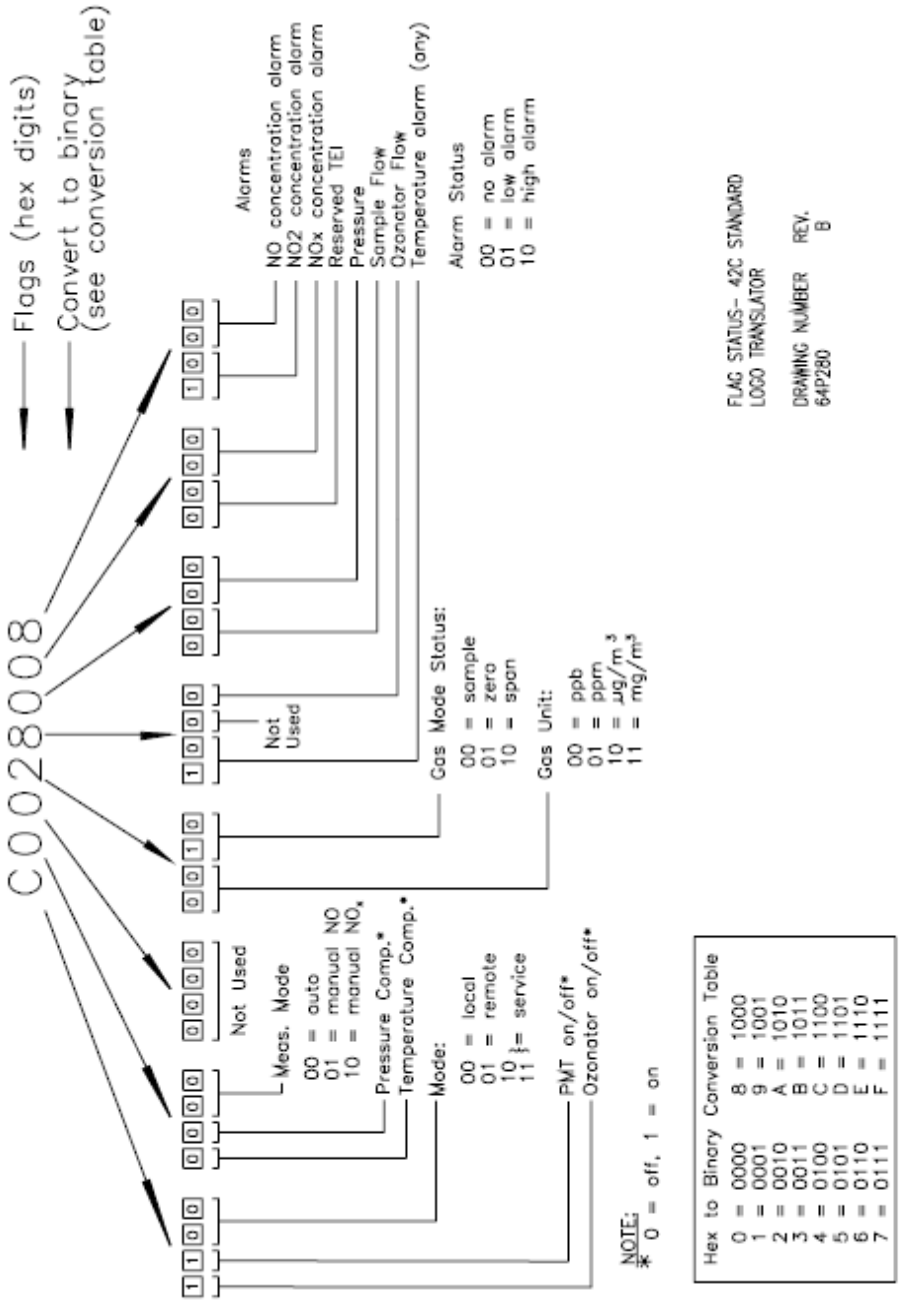

©Thermo Fisher Scientific, Inc.

14.3 APPENDIX C: THERMO 42I DIAGNOSTIC FLAGS

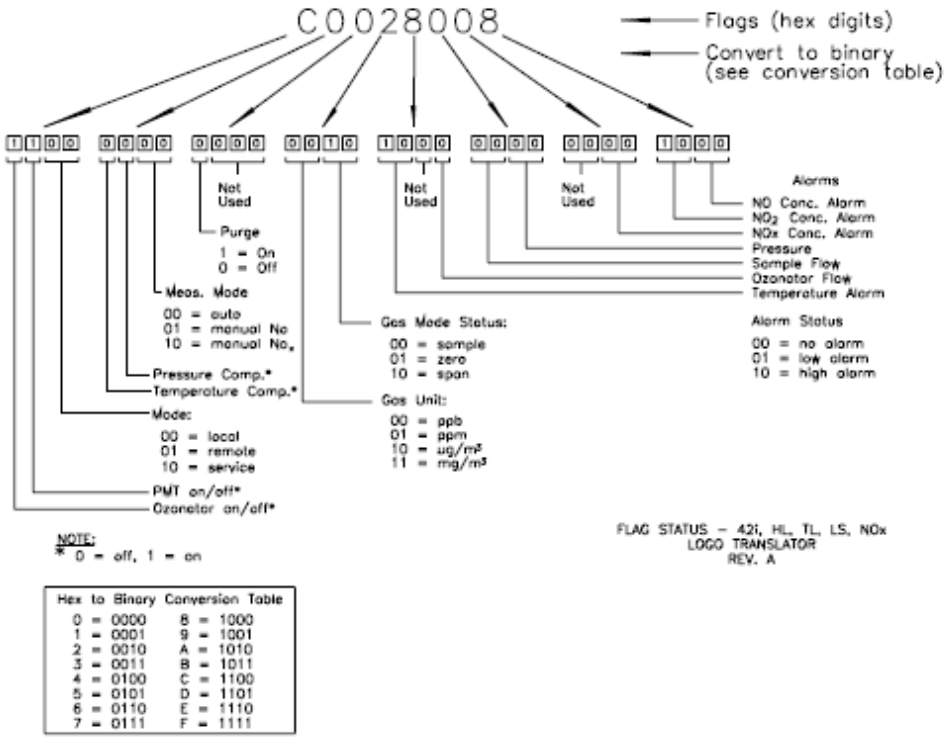

©Thermo Fisher Scientific, Inc.