MONTEREY BAY UNIFIED AIR POLLUTION CONTROL DISTRICT

STANDARD OPERATING PROCEDURES
FOR
THERMO ELECTRON MODEL 43C SULFUR DIOXIDE ANALYZER

Accepted by:

Name: William J. Chevalier Jr. (Supervising Air Monitoring Specialist)

Date: 01/06/15

THIS PAGE INTENTIONALLY LEFT BLANK

TABLE OF CONTENTS

			PAGE	REVISION	DATE
3.2	**THERMO ELECTRON MODEL 43C SO2 ANALYZER**		3.2-5	1	01-06-15
3.2.1	**GENERAL INFORMATION**		3.2-5		
	3.2.1.1	Introduction	3.2-5	1	04-23-14
	3.2.1.2	Theory of Operation	3.2-5	1	
	3.2.1.3	Analytical Cycle	3.2-6	1	
	3.2.1.4	Cautions	3.2-6	1	04-23-14
	3.2.1.5	Interferences	3.2-7	1	02-13-14
	3.2.1.6	Personnel Qualifications	3.2-7	1	04-23-14
	3.2.1.7	Equipment and Supplies Needed	3.2-7	1	04-23-14
	3.2.1.8	Instrument Siting Requirements	3.2-7	1	04-23-14
	3.2.1.9	Data Storage and Transmittal	3.2-7	1	04-23-14
3.2.2	**ROUTINE SERVICE CHECKS**		3.2-9	1	
	3.2.2.1	General Information	3.2-9	1	
	3.2.2.2	Weekly Checks	3.2-9	1	
	3.2.2.3	Monthly Checks	3.2-12	1	
	3.2.2.4	Semi-Annual Checks	3.2-12	1	
	3.2.2.5	Semi-Annual Preventative Maintenance	3.2-12	1	04-23-14
3.2.3	**DETAILED MAINTENANCE AND ALIGNMENT PROCEDURES**		3.2-15	1	
	3.2.3.1	Visual Inspection and Cleaning	3.2-15	1	
	3.2.3.2	Capillary Inspection and Replacement	3.2-15	1	
	3.2.3.3	Leak Check	3.2-16	1	
	3.2.3.4	Lamp Voltage Check	3.2-16	1	
3.2.4	**TROUBLESHOOTING**		3.2-17	1	04-23-14
	3.2.4.1	General Information	3.2-17	1	04-23-14
	3.2.4.2	Troubleshooting Guide	3.2-17	1	
3.2.5	**CALIBRATION PROCEDURE**		3.2-21	1	
	3.2.5.1	Introduction	3.2-21	1	
	3.2.5.2	Apparatus	3.2-21	1	
	3.2.5.3	As Is Calibration	3.2-22	1	
	3.2.5.4	Final Calibration	3.2-23	1	04-23-14
3.2.6	**ACCEPTANCE TEST PROCEDURES**		3.2-25	1	07-24-14
	3.2.6.1	Installation	3.2-25	1	07-24-14
	3.2.6.2	Lifting	3.2-25	1	07-24-14
	3.2.6.3	Unpacking	3.2-25	1	07-24-14
	3.2.6.4	Setup Procedure	3.2-25	1	07-24-14
	3.2.6.5	Analog Output Cover Installation	3.2-28	1	07-24-14
	3.2.6.6	Startup	3.2-30	1	07-24-14

TABLE OF CONTENTS

		PAGE	REVISION	DATE
3.2.7	**REFERENCES**	3.2-31	1	04-30-14
	1. Thermo Environmental Instruments, Inc. May 19, 2003. P/N 100100-00, Model 43C Pulsed Fluorescence SO_2 Analyzer Instruction Manual.	3.2-31	1	04-30-14
	2. U.S. Environmental Protection Agency. Code of Federal Regulations, Title 40 CFR Part 58.	3.2-31	1	04-30-14
	3. MBUAPCD Job Description for A.M. Specialists 1-2, Personnel Qualifications.	3.2-31	1	04-30-14

FIGURES

		PAGE	REVISION	DATE
Figure 3.2.1	Model 43C Flow Schematic	3.2-8	1	
Figure 3.2.2	43C SO2 Analyzer Service Schedule	3.2-13	1	
Figure 3.2.3	Monthly Quality Maintenance Check Sheet (form 576)	3.2-14	1	
Figure 3.2.5a	Cylinder Gas Dilution System	3.2-21	1	
Figure 3.2.5b	EPA Recommended Calibration Levels	3.2-23	1	
Figure 3.2.5c	Multipoint Calibration (form 542)	3.2-24	1	
Figure 3.2.6a	Model 43C Rear Panel	3.2-27	1	
Figure 3.2.6b	Atmospheric Dump Bypass Plumbing	3.2-27	1	
Figure 3.2.6c	Shielded Cable with Shielding Pulled Back	3.2-28	1	
Figure 3.2.6d	Explode View of Analog Output Cover Installation	3.2-29	1	
Figure 3.2.6e	Properly Installed Shield Cable	3.2-30	1	

3.2 THERMO ELECTRON MODEL 43C SULFUR DIOXIDE ANALYZER

3.2.1 GENERAL INFORMATION

3.2.1.1 Introduction

The purpose of this Standard Operating Procedure (SOP) is to document the Thermo Environmental Model 43C Model Sulfur Dioxide Analyzer procedures used by the Air Quality Surveillance Branch of the California Air Resources Board (ARB). The goal of this SOP is two-fold; to formalize 43 Sulfur Dioxide Analyzer installation, configuration and operation procedures in order to ensure comparability among all 43C Sulfur Dioxide data, and to describe supplemental information and modifications to the 43C Sulfur Dioxide Analyzer Operation Manual necessary to successfully integrate the 43C Sulfur Dioxide Analyzer into California's ambient air monitoring network, (see References 3.2.7, No. 1). The Thermo Environmental Model 43C Sulfur Dioxide Analyzer Operation Manual contains a significant source of information pertinent to the operation, maintenance and understanding of this instrument, and therefore the ARB highly recommends a thorough review of the 43C Sulfur Dioxide Analyzer Operation Manual, (see References 3.2.7, No.1).

3.2.1.2 Theory

The Model 43C operating principle is based on measuring the emitted fluorescence of SO2 produced by the absorption of ultraviolet (UV) light. Pulsating UV light is focused through a narrow band-pass filter mirror allowing only light wavelengths of 190 to 230 nm to pass into the fluorescent chamber. SO2 absorbs light in this region without any quenching by air or most other molecules found in polluted air. The SO2 molecules are excited by UV light and emit a characteristic decay radiation. A second filter allows only this decay radiation to contact a photomultiplier tube (PMT). Electronic signal processing transfers the light energy impinging on the PMT into a voltage which is directly analyzed. See specifications below:

SO2 + h.1. SO2*. SO2 + h.2

Where:

h.1 = incidence light,
h.2 = fluoresced light, and
SO2* = SO2 in its excited state

3.2.1.3 Analytical Cycle

1. In sample mode, the sample is drawn into the analyzer through the SAMPLE bulkhead. The sample flows through a hydrocarbon "kicker," which operates on a selective permeation principle, allowing only hydrocarbon molecules to pass through the tube wall. The driving force for the hydrocarbon removal is the differential partial pressure across the wall. This differential pressure is produced within the instrument by passing the sample gas through a capillary tube to reduce its pressure and feeding it into the shell side of the hydrocarbon kicker. The SO2 molecules pass through the hydrocarbon "kicker" unaffected.

2. The sample flows into the fluorescence chamber, where pulsating UV light excites the SO2 molecules. The condensing lens focuses the pulsating UV light into the mirror assembly. The mirror assembly contains eight selective mirrors that reflect only the wavelengths which excite SO2 molecules.

3. As the excited SO2 molecules decay to lower energy states, they emit UV light that is proportional to the SO2 concentration. The band pass filter allows only the wavelengths emitted by the excited SO2 molecules to reach the PMT. The PMT detects the UV light emission from the decaying SO2 molecules. The photo detector, located at the back of the fluorescence chamber, continuously monitors the pulsating UV light source and connects to a circuit that compensates for fluctuations in the UV light.

4. The sample then flows through a flow sensor, a capillary, and the shell side of the hydrocarbon "kicker." The model 43C outputs the SO2 concentration to the front panel display, and the analog or digital outputs.

3.2.1.4 Cautions

To prevent personal injury, please heed these warnings concerning the 43C SO2 Analyzer:

1. Always use a third ground wire on all instruments.
2. Always unplug the analyzer when servicing or replacing parts.
3. If it is mandatory to work inside an analyzer while it is in operation, use extreme caution to avoid contact with high voltages. The analyzer has a 110-volt Volts Alternating Current (VAC) power supply. Refer to the Manufacturer's Instruction Manual and know the precise locations of the VAC components before working on the instrument, (see References 3.2.7, No. 1).
4. Avoid electrical contact with jewelry. Remove rings, watches, bracelets, and necklaces to prevent electrical burns.
5. Avoid looking at analyzer's UV lamp or use protective glasses.

3.2.1.5 Interferences

No known interferences in our District.

3.2.1.6 Personnel Qualifications

Two years of college or equivalent with major course work in electronics. Skills in troubleshooting and schematic reading are required. Six months experience of instrument training followed by additional six months with minimal supervision. See MBUAPCD Job Description for AM Specialist 1-2, Personnel Qualifications, (see References 3.2.7, No. 3).

3.2.1.7 Equipment and Supplies Needed

See Model 43C Manufacturer's Instruction Manual, Chapter 5, (see References 3.2.7, No. 1).

3.2.1.8 Instrument Siting Requirements

See U.S. Environmental Protection Agency (EPA), Code of Federal Regulations, Title 40 CFR 58, Appendices D and E, (see References 3.2.7, No. 2).

3.2.1.9 Data Storage and Transmittal

Data collected by instrument is transmitted via digital connection to data logger. Data stored on data logger is then polled hourly via the internet.

Figure 3.2.1

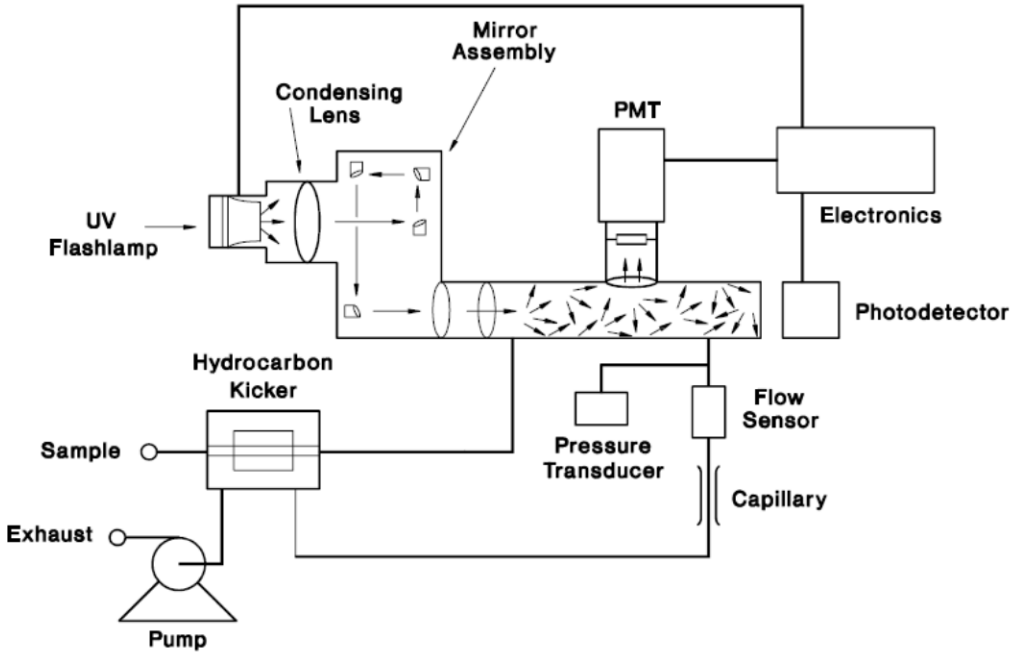

Model 43C Flow Schematic

3.2.2 ROUTINE SERVICE CHECKS

3.2.2.1 General Information

Perform the following service checks routinely using the attached schedule (Figure 3.2.2) and the procedures documented in 3.2.3. Perform checks at least at the prescribed intervals, but may be performed more frequently. Also attached is a copy of the Monthly Quality Control Maintenance Check Sheet (Figure 3.2.3), which you should complete weekly and forward monthly to your supervisor.

3.2.2.2 Weekly Checks

Record the initial and final readings on the Monthly Quality Control Maintenance Check Sheet. Ensure that all readings are within allowable ranges as listed on the sheet.

1. Zero

   With the zero air supply on, allow the Model 43C to sample zero air until a stable response is obtained. From the Main Menu choose Calibration. From the Calibration menu choose Calibrate Zero. Press “Enter” to perform a zero calibration. Press the “Run” pushbutton to return to the Run screen. Record the As Is and Final stable zero air responses from the data logger under the “Zero As Found” and “Zero Final” columns in the Monthly Quality Control Maintenance Check Sheet. Also, record the As Is and Final. Zero should be ≤ +/-3ppb (24hr), or ≤ +/-5ppb (1-14days) (see References 3.2.7, No. 4).

```
SO2 PPB          21.1
SET TO          ZERO?
```

Zero Calibration Screen

2. SO2 Span

   Using station gas calibration system such as TECO 146, generate SO2 calibration gas with a concentration of about 80% full scale. Typically this would be the “Level 1” concentration given by the TECO 146 calibrator. Sample the calibration gas until instrument reading stabilizes. From the Main Menu choose Calibration. From the Calibration menu choose Calibrate Span. Enter the true span concentration into the third line of this display using the left and right arrows to move the cursor and the up and down arrows to increment and decrement the value. Press the Enter button to calibrate the analyzer to the SO2 calibration gas. Record the As Is and Final stable span gas responses from the data logger under the “Span As Found” and “Span Final” columns in the Monthly Quality Control Maintenance Check Sheet. Calculate the percent difference between the SO2 true span gas concentration and the actual

instrument response. Enter the value in the "Percent Difference" column in the Monthly Quality Control Maintenance Check Sheet.

```
SO2 PPM          100.1
RANGE           1000.0
SET TO        00100.0
++ INC/DEC
```

SO2 Span Screen

3. SO2 Precision

   Using station gas calibration system, generate SO2 calibration gas with a concentration of about .07ppm.

4. Calibration Factors

   From the Main Menu choose "Calibration Factors" and record the SO2 Background and the SO2 Coefficient values.

```
CALIBRATION FACTORS:
>SO2 BKG PPB     21.4
 SO2 COEF       1.000
```

SO_2 Background Screen

5. Diagnostics

   From the Main Menu choose "Diagnostics".

```
DIAGNOSTICS:
>PROGRAM NUMBER
 VOLTAGES
 TEMPERATURES
```

Diagnostics Screen

   a. From the Diagnostics Menu choose "Voltages" and record readings for PMT voltage and Lamp voltage. Acceptable Lamp limits are 500-1200V.

```
VOLTAGES:
>PMT          -576.   V
 LAMP          801.   V
  +5 SUPPLY      4.9 V
```

Voltages Screen

b. From the Diagnostics Menu choose “Temperatures” and record readings for “Internal”, and “Chamber” temperatures. Acceptable “Internal” limits are 8-47°C. Acceptable “Chamber” limits are 43-47°C.

```
TEMPERATURES:
 INTERNAL      30.0 °C
 CHAMBER       45.2 °C
```

Temperatures Screen

c. From the Diagnostics Menu choose “Pressure” and record the pressure reading. Acceptable alarm limits are 400-1000mmHg.

```
PRESSURE 753.4 mm Hg
```

Pressure Screen

d. From the Diagnostics Menu choose “Flow” and record the flow in lpm.

```
FLOW        0.503 LPM
```

Flow Screen

e. From the Diagnostics Menu choose “Lamp Intensity” and record the lamp intensity reading. Acceptable Intensity limits are 10000-50000Hz.

```
INTENSITY    35867.HZ
```

Lamp Intensity Screen

6. Alarms

From the Main Menu select Alarms. Record the instrument Alarms (Y/N) under the "Alarms" column in the Monthly Quality Control Maintenance Check Sheet.

7. Sample Particulate Filter

Replace the in-line (5µm) Teflon particulate filter. Record filter replacement under the "Filter change" column in the Monthly Quality Control Maintenance Check Sheet.

3.2.2.3 Monthly Checks

1, Monthly Quality Control Maintenance Check Sheet

Each month, after completing the final week's checks, forward the check sheet to your supervisor and to file.

3.2.2.4 Semi-Annual Checks

1. Multipoint Analyzer Calibration (Figure 3.2.5b)

The SO2 analyzer requires calibration at least once every six months of operation, upon relocation, and after major repairs. Record the date of the most recent calibration on the Monthly Quality Control Check Sheet. See 3.2.5.3 for calibration procedure.

3.2.2.5 Semi-Annual Preventative Maintenance

1. Preventative Maintenance Check sheet (Figure 3.2.3)
   a. Clean or replace flow capillary and o-ring
   b. Optical Span Test as described on page 3-40 in Manufacturer's Instruction Manual, (see References 3.2.7, No. 1).
   (see References 3.2.7, No. 1)
   c. Test Analog Outputs as described on page 3-41 in Manufacturer's Instruction Manual, (see References 3.2.7, No. 1).
   d. Voltage, Temperatures, Pressure, Lamp Intensity, and As-Is Flows Checks
   e. Clean Fan Filter
   f. Blow out the inside of the 43C Analyzer

43C SO2 Analyzer Service Schedule

Task	Weekly	Monthly	Quarterly	Semi-Annually	Bi-Annually
Zero	X				
Span	X				
SO2 BKG	X				
SO2 COEF	X				
PMT and Lamp Voltages	X				
Internal and Chamber Temps	X				
Pressure	X				
Flow	X				
Lamp Intensity	X				
Particulate Filter Change	X				
Q.C. Check Sheet	X				
Check capillary and o-ring				X	
Optical Span Test				X	
Check Voltages				X	
Check Temperatures				X	
Check Pressure				X	
Clean Fan Filter				X	
Blow Out Inside of 49C				X	
Calibration				X	
HC Kicker Replacement					As Needed
Flash Lamp Replacement					As Needed

Figure 3.2.2

File # _____

MONTEREY BAY UNIFIED AIR POLLUTION CONTROL DISTRICT
MONTHLY QUALITY MAINTENANCE CHECK SHEET
TECO MODEL 43C SO2 ANALYZER

Location: _____ Month/Year: _____
Station AIRS Number: _____ Technician: _____
Property Number: _____

DATE	ZERO AS FOUND	ZERO FINAL	SPAN AS FOUND	SPAN FINAL	SPAN TRUE	PERCENT DIFFERANCE

Internal Checks		Readings				
	DATE:					
Calib. Factors	SO2 BKG PBB					
Calib. Factors	SO2 COEF					
PMT -V	DETERIORATION					
LAMP V	>600 <1000					
INTERNAL	>15 <45 C					
CHAMBER	>43 <47 C					
PRESSURE	>400 <1000 mmHg					
FLOW LPM	>.350 <.650 LPM					
LAMP INT.	>20000 <50000 Hz					
ALARMS	YES/NO					
FILTER	CHANGE Y/N					

OPERATOR INSTRUCTIONS:

1. **Daily checks: Review data and strip charts.**
2. **Weekly Checks: Change sample filter. Perform ZERO and SPAN checks. Span check less than 5% from true. Record internal and diagnostic readings.**
3. **Semi-Annual: Clean or replace capillary and o-ring. Optical span test. Clean fan filter and inside of instrument. Date last performed: _____**

Calibrate analyzer. Date last calibrated: _____ Due Date: _____ 6 Months

Date	Comments or Maintenance Performed:

Reviewed by: _____ Date: _____

Form # 576 rev. 03/01/2005 (Word) **Figure 3.2.3**

3.2.3. DETAILED MAINTENANCE AND ALIGNMENT PROCEDURES

3.2.3.1 Visual Inspection and Cleaning

1. The Model 43C requires occasional inspection for obvious visible defects, such as loose connectors, loose fittings, cracked or clogged Teflon® lines, and excessive dust or dirt accumulation. Dust and dirt can accumulate in the instrument and can cause overheating or component failure. Dirt on the components prevents efficient heat dissipation and may provide conducting paths for electricity. The best way to clean the inside of the instrument is to first carefully vacuum all accessible areas and then blow away the remaining dust with low-pressure compressed air. Use a soft paintbrush or cloth to remove stubborn dirt.

2. Under normal use, the filter over the instrument fan, which is located on the rear panel of the instrument, should be cleaned and reconditioned at six-month intervals. If the instrument operates in excessively dirty surroundings, this procedure instituted on a more frequent schedule is required.

    a. Remove the filter cover by gently pulling it off the fan guard.
    b. Flush the filter with warm water and let dry (a clean, oil-free air purge will help with the drying process).
    c. Re-install filter and filter cover.

3.2.3.2 Capillary Inspection and Replacement

To ensure that the pressure-reducing capillary does not plug or impair the flow of sample gas through the instrument, inspect approximately every six months. To remove the capillary, follow the procedure below:

1. Wear an antistatic wrist strap that is properly connected to earth ground. See “Safety Precautions,” earlier in this chapter for more information.
2. Turn the instrument off, unplug the power cord, and remove the instrument cover.
3. Locate the capillary holder and remove the cap nut.
4. Remove the glass capillary (long - 13 mil) and O-Ring.
5. Check the capillary for particulate deposits within the bore. Clean or replace the capillary (Part No. 8919) if particulate deposits are present.
6. Check the O-Ring (Part No. 4800) for cuts or abrasions and replace it if either is present.
7. Replace the capillary in the holder, making sure the O-Ring is around the capillary before inserting it into the holder.
8. Finger-tighten the holder cap nut over the capillary enough to ensure a tight seal.
9. Re-install the instrument cover.

3.2.3.3 Leak Check

A normal flow rate is about 0.5 LPM; if flow rate is less than 0.35 LPM perform the following leak test procedure below:

1. Block the bulkhead labeled SAMPLE on the rear panel with a leak-tight cap.

2. Wait two minutes.

3. From the Run screen, press the MENU pushbutton to display the Main Menu. Use the ↓ pushbutton to move the cursor to Diagnostics, and press ENTER to display the Diagnostics menu. Use the ↓ pushbutton to move the cursor to Sample Flow and press ENTER to display the flow screen. The flow reading should now read zero flow and the pressure reading should be less than 180 mm Hg. If not, check to see that all fittings are tight, and that none of the input lines are cracked or broken.

3.2.3.4 Lamp Voltage Check

The Model 43C is equipped with a lamp voltage control circuit, which automatically corrects for the degradation of the flash lamp with age. However, after several years of use, the lamp may have degraded to the point that it is being driven with the maximum voltage (1200 V) that the power supply can deliver.

To display the lamp voltage, press the MENU pushbutton from the Run screen to display the Main Menu. Use the ↓ pushbutton to move the cursor to Diagnostics, and press ENTER to display the Diagnostics menu. Use the ↓ pushbutton to move the cursor to Lamp Intensity, and press ENTER to display the lamp intensity screen. If this voltage is at 1200 V, it is necessary to either replace the lamp or adjust the lamp voltage control circuit. For more information about replacing the lamp or adjusting the lamp voltage control circuit, see Chapter 7, “Servicing.”

3.2.4 TROUBLESHOOTING

3.2.4.1 General Information

The 43C SO_2 Manufacturer's Instruction Manual contains information pertaining to preventive maintenance, troubleshooting and corrective maintenance, (see References 3.2.7, No. 1). The 43C SO_2 Manual should be your first source of information and performing maintenance and troubleshooting. Consult the Service Department at Thermo Environmental in the event problems occur, at (866) 282-0430. In any correspondence with the factory please note both the serial number and program number of the instrument. Group malfunctions into one of four types: Electrical, optical, flow, or peripheral equipment malfunctions.

NOTE: When removing or installing printed circuit boards or other components, turn the analyzer off and remove the power cord. Damage can occur to some internal components by small amounts of static electricity. Wear a properly grounded antistatic wrist strap while handling any internal component.

3.2.4.2 Troubleshooting Guide

Malfunction
- Possible Cause
  - Action

1. Does not start up
   a. No power
      - Check to ensure instrument is plugged into the proper source (115 or 220 volts). Check instrument fuse. Check voltages from power supply. Verify that the boards are seated properly. Replace boards one at a time with spare boards to isolate the faulty board.

2. No Response to Gas
   a. Bad Calibration
      - Ensure proper calibration
   b. Bad span gas
      - Verify quality of span gas
   c. Flasher power supply
      - Check all voltages and test points
   d. Lamp trigger pack
      - Replace with known good trigger pack to isolate bad part
   e. Lamp
      - Remove lamp and socket from flash holder by loosening the single setscrew. The lamp flash should be clearly visible at a distance of 20 yards in a well-lit room.

f. PMT high voltage power supply
   Check voltage on high voltage power supply connector, this voltage should be about -400 and -1200 volts (violet is positive)
g. PMT
   Replace with known good PMT to see if the PMT is the problem
h. Input board
   Check voltages and test point
i. Digital electronics
   Replace board one at a time with spare boards to isolate the faulty board
j. Bad pump
   Check pump vacuum
k. Capillary blocked
   Clean or replace

3. Excessive response time
   a. Partially blocked capillary
      Clean or replace

4. Calibration Drift
   a. Non-consistent SO2 calibration source
      Verify SO2 generation system or source
   b. Faulty zero air used in calibration system
      Check zero air generation system (should contain less than 0.0005 ppm SO2)
   c. Temperature control board or thermistor
      For proper operation the temperature control board LED should be blinking.

5. Zero drift
   a. Zero air
      Check zero air generation system (should contain less than 0.0005 ppm SO2)

6. Excessive noise
   a. Noisy recorder
      Check recorder for electrical noise pickup
   b. Input board.
      Replace with known good input board to see if it is the problem
   c. Defective or low sensitivity PMT
      Install known good PMT and check performance

7. No output voltage
   a. Jumper missing
      Replace jumper
   b. D/A board
      Replace with a known good D/A board to see if the board is the problem.

8. Inaccurate output voltage
   a. Analog output needs adjustment
      Perform analog output adjustment as described in Chapter 4, "Calibration”
   b. D/A board
      Run DAC ramp as described in Chapter 3, "Operation"

9. Low flow
   a. Capillary blocked
      Clean or replace
   b. Internal instrument leak
      Perform leak test

10. Unstable span
   a. Internal instrument leak
      Perform leak test
   b. PMT high voltage power supply
      Check voltage on high voltage power supply connector, this voltage should be about -400 and -1200 volts (violet is positive).
   c. Flasher lamp
      Replace with known good lamp to see if the lamp is the problem.

11. High scattered light
   a. Zero air supply
      Check zero air generation system (should contain less than 0.0005 ppm SO2).
   b. Low pump vacuum
      Perform leak test. If leak test fails to discover leak, rebuild or replace pump.

12. Low lamp intensity
   a. Flasher lamp
      Check that the lamp and trigger pack are fastened securely

13. Flow meter fluctuations
   a. Dirty pump diaphragm
      Clean or replace
   b. Capillary blocked
      Clean or replace
   c. Clogged Teflon line
      Inspect all lines

14. Span factor outside acceptable limits of 0.5 - 2.0
   a. Bad span gas
      Verify quality of span gas
   b. System leak
      Perform leak test

c. Insufficient calibrator flow

Verify calibrator is providing a flow of at least 0.8 LPM (for standard instrument).

3.2.5 CALIBRATION PROCEDURE

3.2.5.1 Introduction

The Model 43C requires initial and a periodic calibration according to the described procedures in this chapter. The periodic schedule is semi-annual. Also, if possible, perform an As Is calibration required before repairs or upgrades. After repairs or upgrades are complete, a “final” calibration is required. Perform the calibration using a zero air supply such as a TECO 111, a certified gas dilution system such as a TECO 146, and a certified compressed gas cylinder containing a known concentration of SO2. See diagram of the calibration system in Figure 3.2.5a below.

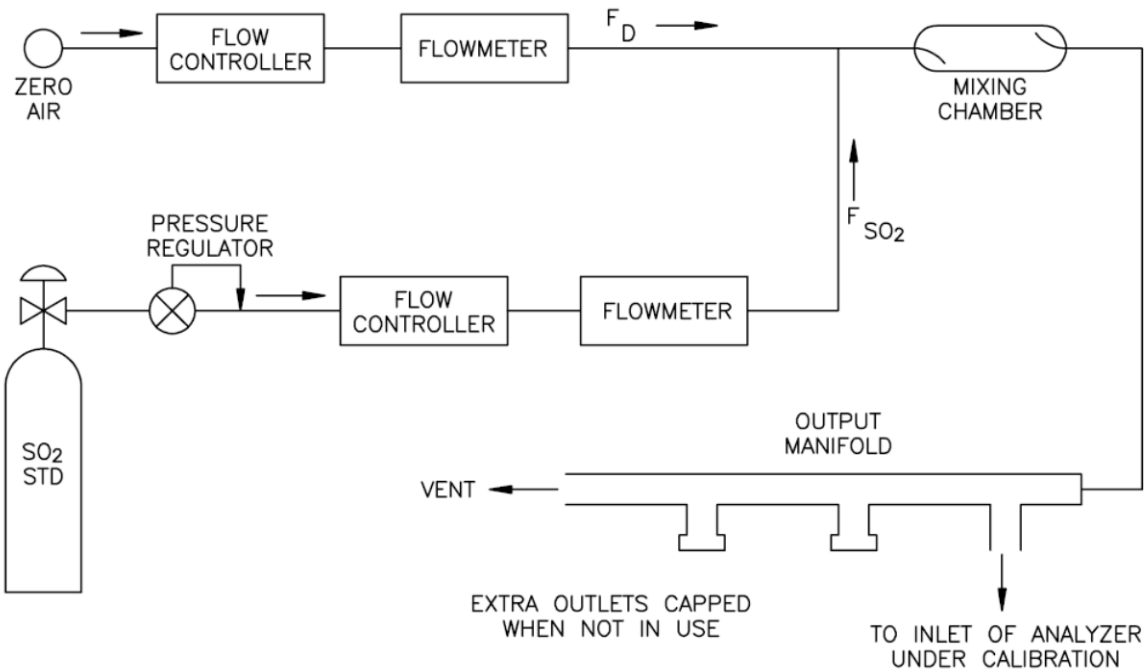

Figure 3.2.5a Cylinder Gas Dilution System

3.2.5.2 Apparatus:

1. A gas dilution system such as a TECO 146 or equivalent.

2. SO2 standard - Compressed gas cylinder containing 20 to 50 ppm SO2 in oxygen free N2 with less than 0.005 ppm H2S, less than 0.005 ppm oxides of nitrogen (NO plus NO2), less than 1.0 ppm (each) of total hydrocarbons, CO, and, CO2, and having a maximum dew point of -40%C. The cylinder must be traceable to a National Bureau of Standards SO2 Standard Reference Material.

3. A zero air supply such as the TECO 111 or equivalent

4. One-quarter or one-eighth inch FEP Teflon Tubing for airflow connections. All fittings in contact with SO2 must be made of 316 stainless steel or FEP Teflon.

5. Calibration report form number 542 (Figure 3.2.5c)

3.2.5.3 As Is Calibration

OTHER THAN ROUTINE CHECKS, ANALYZER REPAIRS OR ADJUSTMENTS SHOULD NOT BE MADE PRIOR TO THE "As Is" CALIBRATION.

1. Assemble the equipment as illustrated (see References 3.2.7, No.1). Using the Data Acquisition System's calibration screen, turn on the zero air supply and allow zero air to flow through the system.

2. While sampling zero air allow both the transfer standard and the analyzer being calibrated to warm-up for <u>at least one hour</u>. The covers of both instruments should be on during the calibration, as the calibration is dependent upon the internal temperature of the analyzer. The warm up period is not necessary if the analyzer and the calibration system are already warm.

3. Record the analyzer identification numbers, analyzer settings, calibrator air and gas flows, calibration gas source concentrations, and any other pertinent information on the calibration worksheet.

4. Allow the analyzer to sample zero air until there is a stable trace on the chart recorder of 10 minutes. Record the analyzers zero reading from the Data Logger Data Display screen.

5. From the Data Logger Calibration screen, turn off the zero air supply and start a Level 1 gas calibration point (Figure 3.2.5b). Allow the analyzer to sample the calibration gas until there is a stable trace on the chart recorder of 10 minutes. Record the analyzers gas reading from the Data Logger Data Display screen.

6. Repeat step 5 to acquire gas readings for Levels 2-5, including the Precision Level (Figure 3.2.5b).

7. Repeat step 4 to acquire a post zero reading. Average the pre and post zero readings and record the value as the Zero Correction value. Combine the Zero Correction value with the individual gas readings to obtain the Corrected Averages.

8. Sum the Source Concentrations to obtain S_1 and sum the Corrected Averages to obtain S_2. Compute the percent deviation from true SO2 using the formula:

$$(S_2 - S_1) / S_1 * 100 = \% \text{ Deviation From True SO2}$$

9. Calculate the slope of S_1 verses S_2 using the formula:

$$S_2 / S_1 = \text{New Slope}$$

NOTE: IF A STRIP CHART RECORDER OR DATA ACQUISITION SYSTEM IS USED FOR PRIMARY DATA RECORDING, THEN THAT DATA SHOULD BE USED IN THE CALCULATIONS INSTEAD OF THE METER READINGS.

These values, in ppb, should correspond closely to the analyzer's digital display. If not, check the calibration of the recording device before making adjustments to the analyzer.

3.2.5.4 Final Calibration

If the percent difference reported in Step 8 above is outside $\pm$2% (see References 3.2.7, No. 4), re-span and/or repair the instrument and repeat the calibration beginning with Step 4. Refer to Section 3.2.4., Troubleshooting, and the 43C SO_2 Manufacturer's Instruction Manual for assistance in troubleshooting and repairing the analyzer, (see References 3.2.7, No. 1).

Audit level	Concentration range, ppm
	SO_2
1	0.0003-0.005
2	0.006-0.01
3	0.02-0.10
4	0.11-0.40
5	0.41-0.90

Figure 3.2.5b EPA Recommended Calibration Levels

Figure 3.2.5c **FILE# _____**

MONTEREY BAY UNIFIED AIR POLLUTION CONTROL DISTRICT
MULTIPOINT CALIBRATION FORM
CO _____ SO_2 _____ ASIS _____ FINAL _____

Station _____

Station AIRS# _____
Calibrator:
Make/model _____

ID # _____

Certification Date _____
Calibration Gas:
Cylinder # _____

Certification Date _____

Concentration CO _____ ppm

SO_2 _____ ppm

Date _____

Parameter _____
Analyzer:
Make/model _____

ID # _____

Range _____

Last Calibration
Date _____

Span Dial / COEF _____

Zero Dial / BKG _____

CALIBRATOR						ANALYZER RESPONSE			
Set Point	Cal Gas		Dilution Air		Source conc ppm ___ ppb ___	DAS ppm ___ ppb ___			TRUE % DIFF
	MFC display	True sccm	MFC display	True sccm		Average	Zero Correction	Corrected Avg.	♠
Zero									
Level 1									
Level 2									
Level 3									
Precision									
Zero									
				Summation S_1			**Summation S_2**		

Average Percent Difference

% Deviation From True = $\frac{S2-S1}{S1}$ x 100 =_____ x 100 =_____%

New Slope = $\frac{S2}{S1}$ = _____ = _____

COMMENTS: _____

_____

Calibrated by: _____

Reviewed by: _____ Date: _____
Form # 542 rev. 02/18/2005 word

3.2.6 ACCEPTANCE TEST PROCEDURES

3.2.6.1 Installation

The installation of the Model 43C includes lifting the instrument, unpacking the instrument, connecting sample, zero, span, and exhaust lines to the instrument, and attaching the analog outputs to a recording device. The installation should always be followed by calibration of the analyzer as described in Chapter 4, "Calibration."

3.2.6.2 Lifting

A procedure appropriate to lifting a heavy object should be used when lifting the analyzer. This procedure consists of bending at the knees while keeping your back straight and upright. The analyzer should be grasped at the bottom, in the front and at the rear of the unit. Do not attempt to lift the analyzer by the cover or other external fittings. While one person may lift the unit, it is desirable to have two persons lifting, one by grasping the bottom in the front and the other by grasping the bottom in the rear.

3.2.6.3 Unpacking

The Model 43C is shipped complete in one container. If, upon receipt of the analyzer, there is obvious damage to the shipping container, notify the carrier immediately and hold for inspection. The carrier, and not Thermo Environmental Instruments Inc., is responsible for any damage incurred during shipment. Follow the procedure below to unpack and inspect the instrument.

1. Remove the instrument from the shipping container and set on a table or bench that allows easy access to both the front and rear of the instrument.

2. Remove the instrument cover to expose the internal components.

3. Remove any packing material.

4. Check for possible damage during shipment.

5. Check that all connectors and printed circuit boards are firmly attached.

6. Re-install the instrument cover.

3.2.6.4 Setup Procedure

1. Connect the sample line to the SAMPLE bulkhead on the rear panel of the instrument. Ensure that the sample is not contaminated by dirty, wet, or

incompatible materials in the sample line. Use FEP Teflon®, 316 stainless steel, borosilicate glass, or similar tubing with an OD of 1/4" and a minimum ID of 1/8" for all sample lines and components. The length of the tubing should be less than 10 feet.

NOTE: Gas must be delivered to the instrument at atmospheric pressure. It may be necessary to employ an atmospheric bypass plumbing arrangement, as shown in Figure 3.2.6b.

If the sample contains particulates larger than 5 microns, it should be filtered before introduction into the instrument. A filter (P/N 6655) which does not interact with SO_2 in the sample should be used. If a sample filter is used, all calibrations and span checks must be performed through the filter. The filter element should be replaced regularly to prevent the absorption of SO_2 by trapped material on the filter.

2. Connect the **EXHAUST** bulkhead to a suitable vent. The exhaust line should be 1/4" OD with a minimum ID of 1/8". The length of the exhaust line should be less than 10 feet. Verify that there is no restriction in this line.

3. Connect a suitable recording device to the rear panel terminals. Two 0-10 volt recorder outputs are supplied in the standard instrument. Terminals 1 and 2 are the ground and signal terminals for data output one. Terminals 3 and 4 are the ground and signal terminals for data output two.

4. Plug the instrument into an outlet of the appropriate voltage and frequency.

CAUTION: The Model 43C is supplied with a three-wire grounding cord. Under no circumstances should this grounding system be defeated.

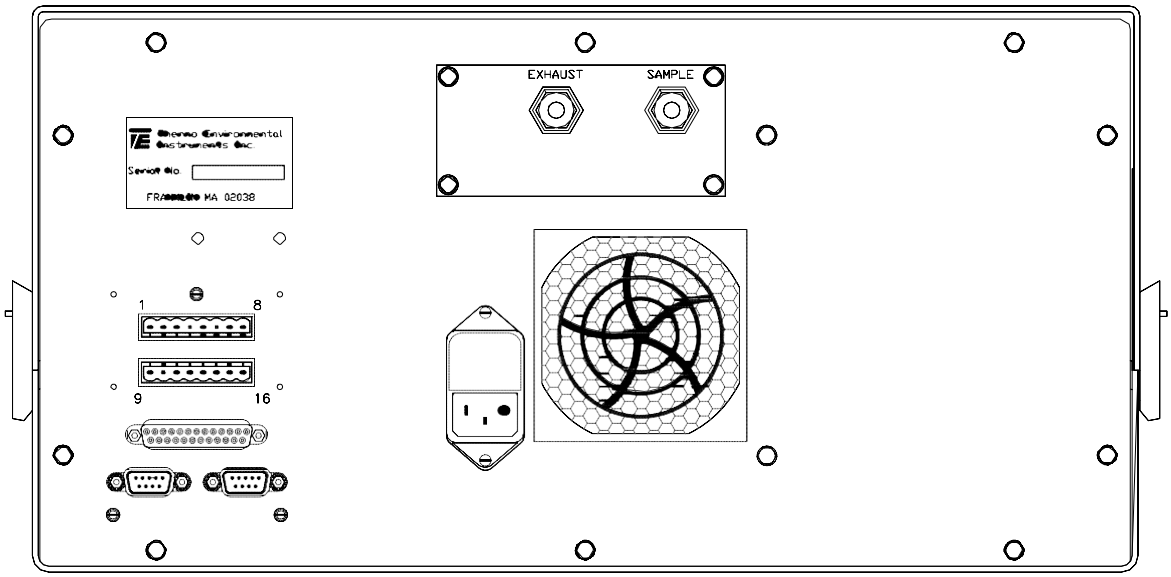

Figure 3.2.6a. Model 43C Rear Panel

43C-REAR

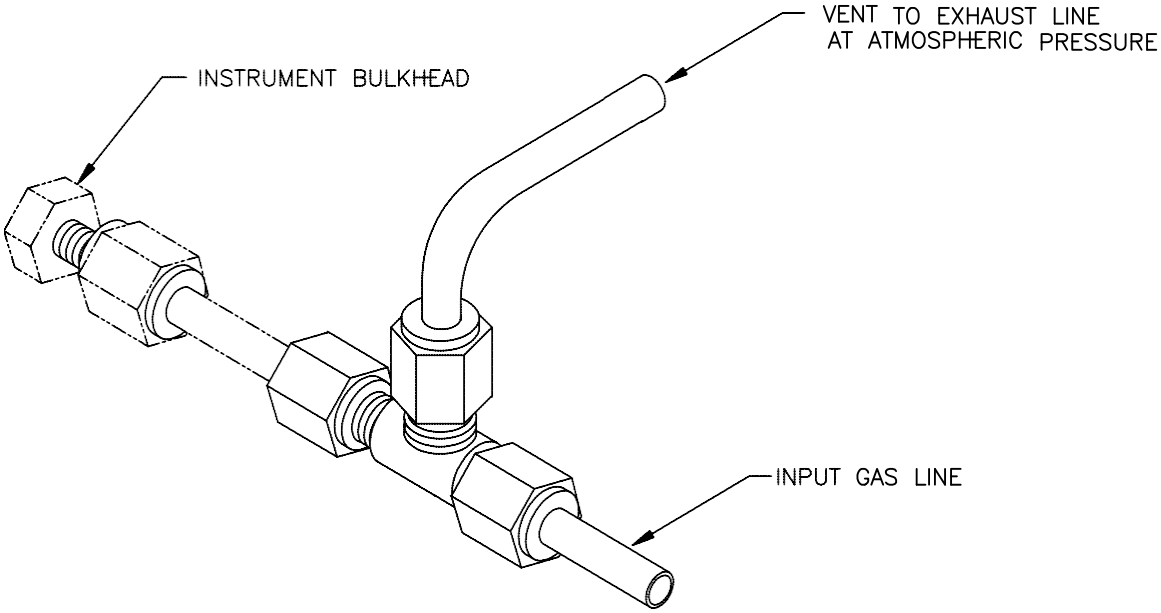

Figure 3.2.6b. Atmospheric Dump Bypass Plumbing

57P7100

To install optional equipment see Chapter 9, “Optional Equipment.”

3.2.6.5 Analog Output Cover Installation

This analog output cover must be mounted over the analog outputs to comply with 89/336/EEC Directive. This procedure describes how to install the user-supplied analog output cable in the instrument's analog output cover. The following shielded cables or their equivalent are recommended:

Cable	Gauge	No. of Conductors
Alpha #1741C	20	2
Alpha #1746C	18	2
Alpha #5320/2C*	20	2
Alpha #51 52C*	20	2
Alpha #5162C*	18	2
Alpha #1743C	20	4
Alpha 1747/4C	18	4
Alpha #5320/4C	20	4
Alpha #5154C	20	4
Alpha #5164C	18	4
Belden #8208	18	2

* Maximum shielding. Under harsh environments, maximum shielding may be required. The following tools are required:

Small screwdriver
Wire stripper
Electrical tape or heat shrink tubing

The user-supplied shielded analog output cable must be properly grounded by coming into full contact with the cable clamp (mounted to the analog output cover). To ensure full contact, the shielding must be exposed and folded back over the cable as shown in Figure 3.2.6c.

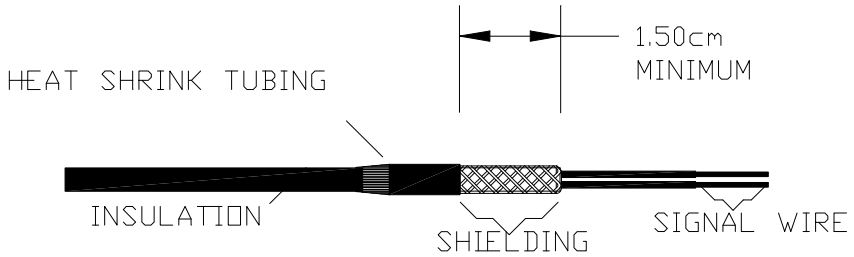

Figure 3.2.6c. Shielded Cable with Shielding Pulled Back

Follow the procedure below to prepare the shielded cable:

1. Remove about 1.8 cm of insulation from the cable.
2. Fold back the shielding.
3. Use electrical tape or shrink tubing to hold the shielding in place. Be sure at least 1.5 cm of shielding is exposed.
4. Strip each signal wire.

Follow the procedure below to connect the shielded cable to the 8-position header:

1. Pass the shielded cable through the cable clamp on the analog output cover, as shown in Figure 3.2.6d.

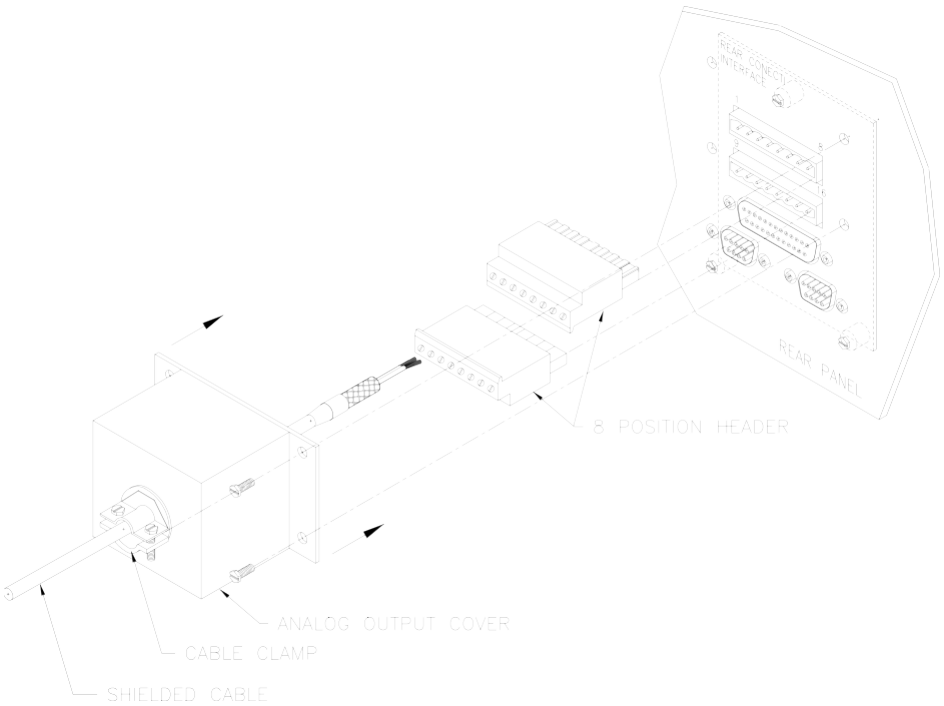

Figure 3.2.6d. Exploded View of Analog Output Cover Installation

2. Insert the bare signal wire into the slot of the header.
3. Tighten down the corresponding set screw.
4. Repeat steps 2 and 3 for each signal wire.
5. Plug the header(s) into the analog output connectors.
6. Install the analog output cover using the four #6 screws with star lock washers.
7. Position the cable shielding so that it comes in contact with the cable clamp.
8. Tighten down the cable clamp onto the shielding, as shown in Figure 3.2.6e.

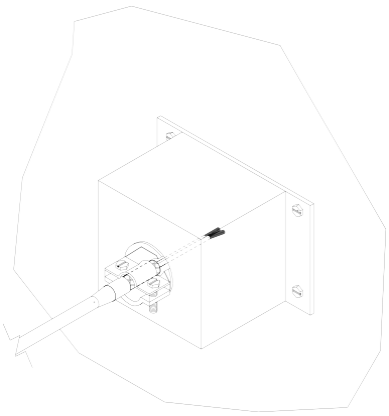

Figure 3.2.6e. Properly Installed Shield Cable

9. Install cable clamp into shield cover and secure. Be sure there is good electrical conductivity between clamp and shield cover.

The following is a parts list of components in the analog output cover assembly:

Part No.	Description	Qty.
7592	Analog output cover	1
11519	8-Position header	2
5889	#6 Star lock washers	4
5820	6-32X3/8” screw	4
14549	Cable clamp	1

3.2.6.6 STARTUP

1. Turn the power on.
2. Allow 30 minutes for the instrument to stabilize.
3. Set the instrument parameters such as operating ranges and averaging times to the appropriate settings. For more information about instrument parameters, see Chapter 3, “Operation.”
4. Before beginning actual monitoring, perform a multipoint calibration as described in Chapter 4, “Calibration.” When performing the first calibration, the acceptance criteria for zero air checks is ≤ +/-3ppb (24 hours) and ≤ +/-5ppb (24 hours to 14 days) (see References 3.2.7, No. 4).

3.2.7 REFERENCES

1. Thermo Environmental Instruments, Inc. May 19, 2003. P/N 100100-00, *Model 43C Pulsed Fluorescence SO_2 Analyzer Instruction Manual*. Copyright © 2000. Thermo Environmental Instruments, Inc., Franklin, MA.
2. U.S. Environmental Protection Agency (EPA). *Code of Federal Regulations, Title 40 CFR Part 58.*
3. Monterey Bay Unified Air Pollution Control District (MBUAPCD). *MBUAPCD Job Description for AM Specialists 1-2*, Personnel Qualifications. MBUAPCD, Monterey, CA.
4. U.S. Environmental Protection Agency (EPA). *Quality Assurance Handbook, Volume II, Appendix D.*