South Coast Air Quality Management District
Science and Technology Advancement

Monitoring and Analysis Division
Ambient Monitoring Branch

STANDARD OPERATING PROCEDURE

FOR

Rupprecht & Patashnick TEOM Series 1400a PM_{10} Monitor

SOP00062
Version 1.5
May 11, 2010

PREPARATION, REVIEWS AND APPROVALS

Standard Operating Procedure for R&P Series 1400a TEOM PM_{10} Monitor

Prepared By: _____ Date: 4/2/10
Brian Vlasich
Senior AQ Instrument Specialist

Reviewed By: _____ Date: 4/2/10
Rene Bermudez
Principal AQ Instrument Specialist

Reviewed By: _____ Date: 4-2-10
David Sawyer
Principal AQ Instrument Specialist

Approved By: _____ Date: 4-2-10
Phil Fine, Ph.D
Manager, Atmospheric Measurements

Quality Assurance Approval:

Approved By: _____ Date: 04/02/10
Jason C. Low, Ph. D

REVISION HISTORY

Standard Operating Procedure for R&P Series 1400a TEOM PM_{10} Monitor

Version	Date
1.0	February 9, 2010
1.1	March 9, 2010
1.2	April 1, 2010
1.3	April 2, 2010
1.4	April 2, 2010
1.5	May 11, 2010

REVISION CHANGES FROM PREVIOUS VERSION

Standard Operating Procedure for R&P Series 1400a TEOM PM_{10} Monitor

Section	Revisions
- Figure B1	- Removed CARB Monthly Maintenance Sheet and replaced with AQMD version

TABLE OF CONTENTS

Standard Operating Procedure for Rupprecht & Patashnick Series 1400a TEOM PM_{10} Monitor

		Page Number
1.0	**GENERAL INFORMATION**	
1.1	Purpose	1
1.2	General Description/ Principle of Operation	1
1.3	Safety	1
2.0	**APPARATUS AND EQUIPMENT**	
2.1	Indoor Installation Example and TEOM Diagram	2
2.2	Equipment Description and Supplies	2
2.3	Essential Service Equipment	3
2.4	Siting and Installation	3
3.0	**BASIC OPERATION PROCEDURES**	
3.1	Operating the TEOM, Initialization	4
3.2	Mass Transducer Filter Installation	4
4.0	**ROUTINE MAINTENANCE PROCEDURES**	
4.1	Leak Testing	6
4.2	Precision Flowcheck Procedures	6
4.3	Downloading Data	7
5.0	**QUALITY CONTROL MAINTENANCE PROCEDURES**	
5.1	General Information on Routine Maintenance Checks	8
5.2	Daily Check	8
5.3	Weekly Check	8
5.4	Biweekly Check	8
5.5	Semiannual Check	9
5.6	Annual Check	9
5.7	Biennial Check	9
5.8	Perform as Required	9
6.0	**SOFTWARE CONFIGURATION**	
6.1	General	10
6.2	Set Temps/Flows	10
6.3	ESC Model 8800 Data Logger Configuration	10

6.4 ESC Data Logger and AQDAS Configuration 10

FIGURES

Figure 1: Altitude Correction Factors 12
Figure A-1: Analog Output Wiring Assignments Appendix A
Figure B-1: Sample Monthly Maintenance Sheet Appendix B
Figure B-2: TEOM Software Calibration Datasheet Appendix B
Figure B-3: TEOM Calibration Report Appendix B

APPENDICES

Appendix A: Hardware Configuration Diagrams Appendix A
Appendix B: Routine Maintenance Worksheets Appendix B

1.0 GENERAL INFORMATION

1.1 Purpose:

The purpose of this Standard Operating Procedure (SOP) is to describe specific procedures for the routine operation, routine and preventative maintenance, calibration, and troubleshooting for the TEOM 1400a used in the South Coast AQMD air monitoring network.

1.2 General Description and Principle of Operation

The TEOM (Tapered Element Oscillating Microbalance) is a particulate sampling instrument used for real-time measurement of particulate mass concentration with size-selective sampling capability. A flowrate of 16.7 lpm (0.6 cfm) can be used for both total suspended particulate (TSP) sampling and size-selective inlet (SSI) sampling, depending on the type of inlet used. The flowrate of 16.7 lpm is necessary to achieve desired cut-size when used in conjunction with a size-selective inlet head for PM-10, PM-2.5, or PM-1 sampling. Once the air has passed through the inlet, the flow is split; whereby 13.7 lpm is diverted to an exhaust system and the remaining 3.0 lpm is drawn into the measurement chamber.

The airflow to the measurement chamber is directed through a Teflon-coated borosilicate glass filter which vibrates on a hollow tapered element. An electronic circuit measures and records the frequency of vibration, which decreases as particulate mass increases. The measurement, which is recorded in µg/m3, is corrected for local temperature and barometric pressure. Concentrations are displayed in real-time, and retrievable data include (but not limited to): 10-minute average mass concentration (MC), 30-minute MC, 24-hour MC, temperature of the mass transducer and the sample stream at the base of the heated air inlet, and actual flows through the main flow controller and through the auxiliary flow controller. The TEOM is equipped with an RS-232 data output that may be connected to an external data logger.

1.3 Safety

The installation of the TEOM should only be performed by properly trained personnel. The TEOM is intended for indoor installation with the vertical inlet protruding vertically through the roof of the sampling site. Safety precautions for roof access should always be taken and the use of a properly secured ladder may be required. Other considerations for the TEOM unit are typical of any electronic instrument, where the potential for electric shock and high voltages inside the instrument are present.

2.0 APPARATUS AND EQUIPMENT

2.1 Indoor Installation Example and TEOM Diagram

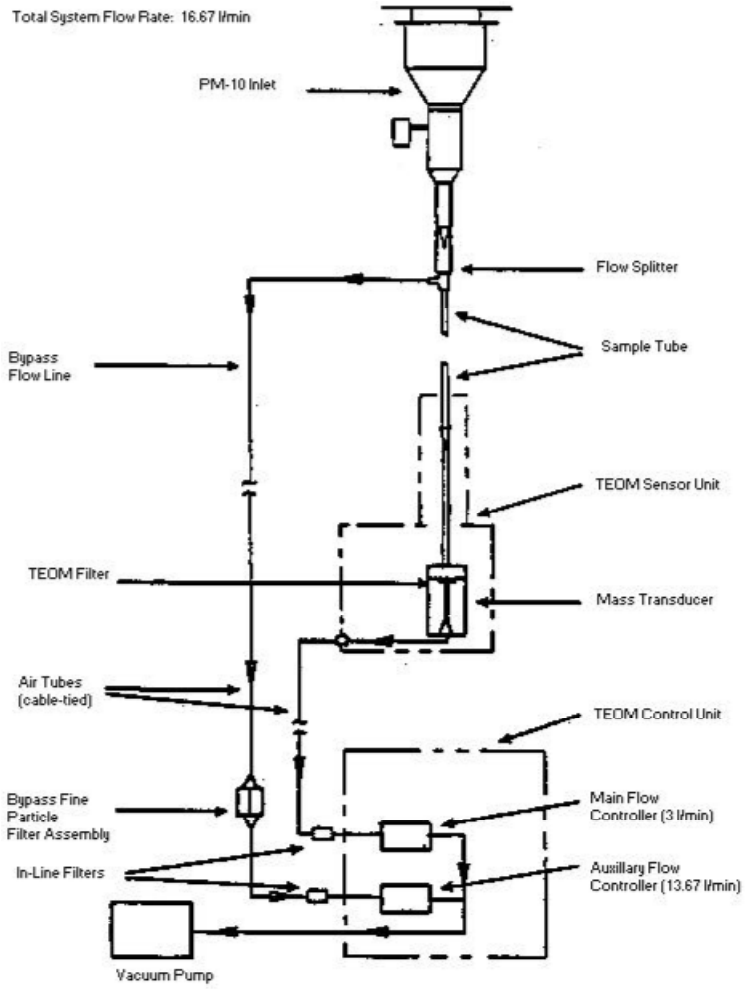

2.2 Equipment Description and Supplies

The TEOM consists of two main components, the electronics control and sensor units. Additional components supplied by R&P are listed on Page 2-3 of the R&P Manual. Typical installations should also include the following items in addition to those listed in the R&P Manual:

1. An additional PM_{10} inlet (R&P or Sierra-Andersen Model 246b).
2. A sufficient length of internally polished, to 15 micro-inch roughness, 1/2 inch OD stainless steel (ss) tubing (Valex Corporation Type 3-16LS, MO #159137-01 or equivalent) for a one-piece sample probe.
3. A heavy-duty, photographic type tripod for support of inlet.
4. A sufficient length of 3/8" OD x 1/4" ID flexible tubing for remote vacuum pump installations. Larger ID heavy-wall tubing is recommended for runs longer than 50 feet.
5. Additional sample, inline and auxiliary flow filters.

6. Monthly Quality Control Maintenance Check sheet.

2.3 Essential Service Equipment

Below are the necessary service items needed for routine and non-routine maintenance procedures.

1. Mass transducer filter exchange tool (kept inside mass transducer unit)
2. Resin-fiber filters for auxiliary and main flow line inline filter housings (changed as-needed)
3. Approved flow measurement device, such as DeltaCal or TetraCal, including adapters for flow measurement greater than 10-30 slpm and 1-5 slpm.
4. Multimeter for voltage measurement (for analog hardware calibration and other diagnostics)
5. RS-232 9-pin and/or USB-serial communications cable for connection with a laptop computer

2.4 Siting and installation

The System Installation directions in Section 2 of the R&P Manual should be followed as closely as possible. Two factors of primary concern that will determine the placement of the sensor unit are the need for a sturdy, vibration free mounting and a straight vertical access to the roof for the sample probe.

Installations for mounting of the sensor may include counter-tops, reinforced wall shelves or vibration isolated instrument rack shelves. The sample probe and auxiliary flow lines should be run in a 2 to 3 inch ID heavy-wall, sunlight resistant PVC conduit which starts flush with the interior ceiling and ends 30 inches above roof level. Seal the roof/conduit juncture with a roof jack equipped with a vinyl collar. Install a PVC cap on the outside end of the conduit to prevent rain entry. The cap will need to be drilled with one 1/2 inch hole on center for the probe and one 3/8ths inch hole off center for the auxiliary flow line. This should provide a sturdy, rain tight mounting for the tripod, flow splitter and inlet. Insulate the sample probe between the sensor housing and the exterior roof with foam pipe insulation. This will minimize temperature fluctuations caused by air conditioning drafts.

3.0 Basic Operation Procedures

3.1 Operating the TEOM, Initialization

1) To turn on the TEOM, press the "Power" button on the control unit, and turn on the pump.

2) Allow the instrument to initialize. The main screen displays a status line that provides information on this process, and whether the instrument is operational.

Note: data collection will not start until flow rates and temperatures reach tolerance levels and remain stable for 30 minutes.

3.2 Mass Transducer Filter Installation

1) Check that a filter is installed in the mass transducer. Ensure that the filter loading is less than 75%, or change the filter if the filter loading will be over 75% by the next service.

The procedure is outlined step-by-step below:
Note: Disable the TEOM channel on the ESC data logger!

- Keep the sample pump running.
- Press "Data Stop" on the control unit.
- Open the door of the sensor unit.
- Open the door of the mass transducer.
- Using the black knob, swing the mass transducer down. The tapered element stops vibrating.
- Remove the old filter by inserting the lower tine of the fork of the filter exchange tool (kept inside the mass transducer) under the filter. The upper and lower tines of the fork straddle the hub of the filter. Gently lift straight up on the filter. DO NOT TWIST OR PULL SIDEWAYS. Discard the used filter.
- Use the exchange tool to remove a new pre-conditioned filter (warm and dry) from the filter pocket in the mass transducer. DO NOT TOUCH THE FILTERS WITH YOUR FINGERS.
- Insert the hub of the filter directly onto the tapered element and apply downward pressure to set the filter firmly in place.
- Remove the filter exchange tool without disturbing the filter.

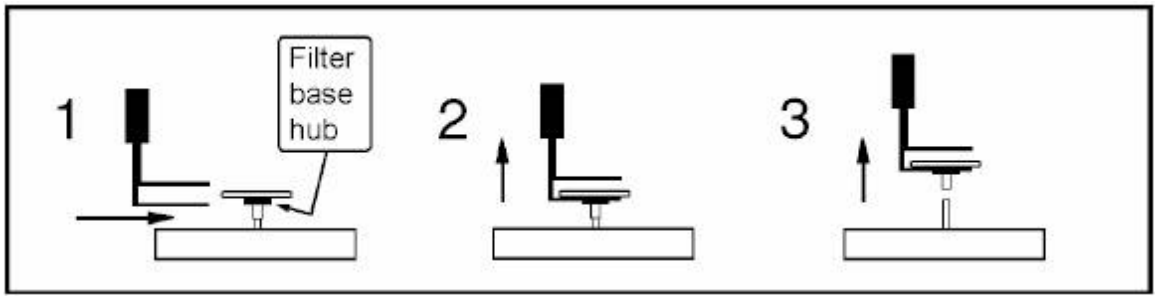

- Place a new filter in the filter exchange tool and place it in the filter pocket to condition.

- Using the black knob, gently raise the mass transducer to the closed position and secure the latch.
- Close and latch the sensor unit door.
- Press "Run" to return the instrument to collection.
- After 5 minutes have elapsed, open the mass transducer again and press straight down on the filter with the bottom of the filter exchange tool. This ensures the filter cartridge is properly seated after the temperature has increased.
- Record in the TEOM logbook the date and time of the visit and briefly describe the changes made to the station.

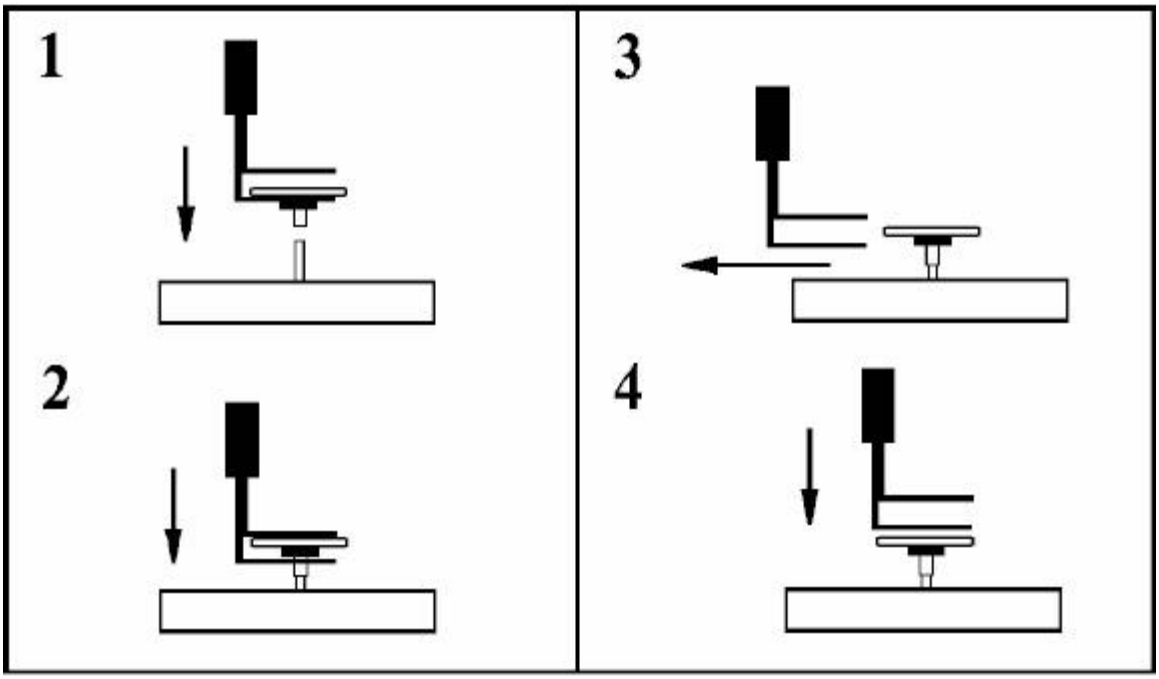

4.0 Routine Maintenance Procedures

4.1 Leak Testing

1) A leak check should be performed in these cases:

- When the flow check is different from 16.7 l/min total flow and 3.0 l/min main flow by +/- 5%.
- When either one of the mass flow controllers is replaced or removed from the instrument.
- For routine check every two months.

2) To perform a leak test follow the steps below (refer to the TEOM manual page 7-4 for more details)

- Disable the TEOM channel on the ESC data logger.
- Keep the instrument and the pump on.
- Remove the micro filter as describe in the filter changing procedure.
- Remove the PM10 inlet head from the flow splitter.
- Place the flow audit cap over the tube and close the valve.
- On the control unit screen use the up or down arrows to show the main flow and the auxiliary flow.
- Both flows should read between 0.0-0.15 l/min if not then check the hose fittings and the flow system to find the leak.
- Once the leak is fixed install new micro filter.
- Remove the flow cap and install the PM1rr0 inlet head back.
- Reset the system by pressing F1 or Run on the key pad.
- After the stabilization period has passed enable the TEOM channel on the ESC data logger.

4.2 Precision Flowcheck Procedures

NOTE: The TEOM flowrate display is in volumetric flow units (LPM). If the flow checks are measured with a MFM, standard liters per minute (SLPM) must be converted to LPM using the ambient pressure and temperature conditions present at the MFM. The equation for this conversion is as follows:

$$LPM = \frac{760 \text{ mmHg}}{Pa \text{ mmHg}} \times \frac{Ta + 273 \text{ C} \times SLPM}{298 \text{ C}}$$

Where: Pa = Ambient Pressure in mmHg
Ta = Ambient Temperature in C

To perform a precision flowcheck, follow the steps below

- Disable the TEOM channel on the ESC data logger.
- From the TEOM control unit screen record the main and auxiliary flow rates use the key pad up and down arrows to access the readings.
- Remove the PM10 inlet head.

- Install flow adaptor.
- Measure and record the total flow rate using Delta Cal or other flow check meter.
- Remove the auxiliary flow line and cap at the flow splitter.
- Measure and record main flow rate.
- Place the PM10 inlet head and reconnect the auxiliary flow line.
- Enable the TEOM channel on the ESC data logger.
- Calculate and record the percent deviation of TEOM's indicated main flowrate from the measured flowrate using the following formula:

$$\% \text{ Deviation} = \frac{\text{Indicated LPM}}{\text{LPM}} \times 100$$

Where: Indicated = flowrate as indicated on TEOM's display
LPM = flowrate as measured by secondary device

4.3 Downloading Data

Data from the TEOM may be downloaded via RS-232 cable directly to a PC, if there is not a modem and external telecom data transmittal configuration. The step-by-step procedure is outlined below:

- Use a PC onto which TEOMCOMM software or RPCOMM has been loaded.
- Connect the 9-to-9 pin cable from the RS-232 port on the monitor to the RS-232 port on the PC.
- Press the RS-232 key on the TEOM or press “05” and “Enter.”
- Follow the user’s manual for either the TEOMCOMM or RPCOMM software to download the data.
- After the records are downloaded, immediately set the RS-232 protocol on the TEOM to “None.” This will ensure the next download begins where the previous one left off.
- Disconnect the RS-232 cable and exit the program. Return to main TEOM screen and check system operation as described in chapter “Setting operating parameters.”
- Record in the TEOM logbook the date and time of the visit and briefly describe the changes made to the station.

5.0 Quality Control Maintenance Checks

5.1 General Information on Routine Maintenance Checks

Detailed directions of routine maintenance procedures are described in Section 7 of the R&P Manual. Based upon these manufacturer's procedures and U.S. EPA requirements, the monthly quality control checksheet shown in Figure 4 has been developed to alert the operator that maintenance is due and to provide a record of quality control actions.

5.2 DAILY CHECK

- Check Status Lights: On a daily basis, the TEOM's operation should be checked by viewing the Status Light, Percent of Filter display and chart recorder trace. The red Status Light will turn on if a monitored parameter (such as temperatures, pressures, or flowrates) is out of operational bounds. See Page 4-4 of the R&P Manual for additional details.
- Check Microbalance Filter: The TEOM's sample filter must be changed before 90% is indicated on the display. Procedures for changing the filter are in Section 3 of the R&P Manual. Whenever the sample filter requires changing, the auxiliary flow inline filter should also be replaced unless it is of the extra capacity variety which may be replaced when necessary. A cleaned size selective inlet (as per Appendix F of the R&P Manual) should also be installed at this time.

5.3 WEEKLY CHECK

- Record Values: On a weekly basis, record the values found on the Main Screen of the TEOM's digital display onto the Monthly Quality Control Maintenance Checksheet (Figure 4). A description of the Informational Lines is provided by the R&P Manual on Page 4-9.

5.4 BIWEEKLY CHECK

- Monthly Data Sheet Entry: Every two weeks, record the results of flow checks and the average pressure and temperature settings onto the monthly Q.C. checksheet. The average pressure and temperature settings are factors used by the TEOM to calculate the mass concentration. They are accessed by scrolling down Menu Screen 12. These values should be the same as those in the most recent TEOM Calibration Report (Figure 6) or the previous month's Quality Control Maintenance Checksheet (if no changes in the settings have recently been made).

- A one-point flow verification of the instrument must be performed at least biweekly. This is accomplished by measuring the main and total (sum of main and auxiliary) flowrates and comparing these measurements to the TEOM's indicated flowrates as shown on its digital display. Record these readings and measurements on the check sheet (see Appendix B, Figure B-1) and if they differ by more than +/-10% from design flow or +/-7% from the transfer standard. If the flowcheck values exceed tolerances, take corrective action by notifying your senior, updating the downtime log, and taking the unit offline from the datalogger until a repair is completed. The flows may be measured with a DeltaCal, TetraCal, or other approved flow measurement device.

5.5 SEMIANNUAL CHECK

Every six months perform the following:

1. Clean the Air Inlet System as per Page 7-3 of the R&P Manual.
2. Replace the main and auxiliary flow inline filters.
3. Perform a flow controller software calibration and leak test.

NOTE: The leak test procedure to be followed is on Page 7-4 of the R&P Manual. In addition, perform the leak test after both the "as-is" and "final" portions of the semiannual software calibration.

5.6 ANNUAL CHECK

Once per year perform the following:

1. Analog input and output calibration
2. Flow controller hardware calibration

5.7 BIENNIAL CHECK

Every two years perform the following:

1. Mass transducer calibration verification

5.8 PERFORM AS REQUIRED

1. Disassemble and clean size selective inlet concurrently with replacement of TEOM microbalance (sample) filter.
2. Replace auxiliary flow filter(s)

6.0 SOFTWARE CONFIGURATION

6.1 General

The software configuration consists of setting various parameters in the TEOM's software such as choice of analog outputs, temperatures, pressures, and flow rates. These procedures are detailed in Sections 4 and 5 of the R&P Manual. Typical installations have settings which may differ from examples shown in the R&P Manual. The following settings are currently being used at various monitoring sites:

NOTE: If the TEOM is shut off, an internal battery will hold the configured settings.

SET ANALOG OUTPUTS (Menu Screen 04); see page 5-3 of R&P Manual

Max Volt 1-VDC - Sets Output Range Voltage to 0-1.0 VDC
A01 Var Mass Conc - Selects Mass Conc. as output of A01
AO1 Min -50.00 - Selects -50 as Minimum Mass Concentration
AO1 Max 950.00 - Selects 950 as Maximum Mass Concentration
Jumpers 2-VDC - Reflects Internal Jumper Connections

These settings correspond to an output slope of 1000 and an intercept of -50. The purpose of this offset is to minimize negative voltage outputs if the TEOM's mass concentration readings fall below zero. This offset must be considered when connecting the TEOM to an external recording device such as a chart recorder or data logger.

6.2 SET TEMPS/FLOWS (Menu Screen 12); see page 4-19 of R&P Manual

The settings shown on Screen 12 of the R&P Manual are correct for most applications. However, in 1993-1994, the U.S. EPA granted conditional approval for modifications to the main flowrate and temperature settings under provisions contained in Section 2.8 of Appendix C to 40 CFR, part 58. The flowrate modification consists of operating the TEOM at the reduced main (sample) flowrate of either 1.0 or 2.0 LPM if it is equipped with the proper flow splitter (available from R&P). The reduced flowrate provides an extended interval between sample filter changes in areas of high particulate concentrations. Operating at a reduced flowrate may also reduce loss of mass on the sample filter by decreasing ventilation through same.

The temperature modification consists of operating the TEOM at the reduced temperatures of: CaseT 30, AirT 30, CapT 0 (off), and EnclT 25 degrees Centigrade (C). This modification is intended to reduce volatilization of the sample and thus provide better correlation of the data with conventional gravimetric PM10 measurement methods. This temperature configuration is only permitted if certain conditions exist and with approval by the U.S. EPA on a case by case basis. For more information, see R&P's Technical Note #4, dated October 1993.

T-A/S 25.00 25.00

These are the average ambient (outdoor) and-reference standard temperature settings, left to right respectively. The average temperature setting should be set to the 24-hour average outdoor temperature expected at the TEOM site. This setting should be adjusted seasonally, i.e., winter, spring, summer and fall, in order to minimize temperature caused errors in the flowrate calculations performed by the TEOM.

The standard temperature setting should be set at 25 degrees C. This is the U.S. EPA standard temperature to which the flowrates and hence, the mass concentration calculations are referenced.

P-A/S 1.000 1.000

These are the average and standard barometric pressure settings, left to right respectively. The average pressure setting should be set to the barometric pressure in atmospheres (atm) of the site's elevation. If the elevation or pressure in millimeters of mercury (mmHg) is known, the corresponding pressure in atm is the same value as the altitude correction factor (ACF) shown in Figure 1. The pressure in atm may also be calculated by the following formula:

$$Pa(atm) = \frac{Pa(mmHg)}{760(mmHg)}$$

Where: Pa(atm) = ambient pressure in atmospheres
Pa(mmHg) = ambient pressure in millimeters of mercury
760(mmHg) = standard pressure in mm Hg

The standard pressure setting should be set to 1.000 atm. This is the U.S. EPA standard pressure to which the flowrates are referenced.

Fadj Main 1.000 and FAdj Aux 1.000

These factors are used by the TEOM's software to adjust for deviations of the main and auxiliary flowrate setpoints from the actual flowrates. They are determined by a proportional comparison to the actual or true flowrates as measured with a transfer standard during the software calibration. Additional information on these factors is contained in Section 8.2 of the R&P Manual.

> **NOTE**: These flowrate adjustment factors change the actual flowrates but this change will not be reflected by the TEOM's flowrate display. The TEOM's displayed flowrate is an indicated flowrate only. It is neither affected by the FAdj settings nor is used by the TEOM to calculate the actual or true flow in SLPM. The conversion to SLPM is based on the flowrate setpoints.

6.3 ESC MODEL 8800 DATA LOGGER CONNECTION

The TEOM's analog output (A01-mass concentration), as previously selected in the Software Configuration, and should be connected to the selected analog input channel of the ESC data logger. Using the supplied 15-Pin D-Connector and signal cable, connect the front or rear (preferred) Analog I/O of the TEOM's Control Unit to the ESC's analog input. A schematic diagram of the TEOM's analog output wiring assignments is shown in Figure 2.

6.4 ESC DATA LOGGER AND AQDAS CONFIGURATION

Configure the selected ESC and AQDAS TEOM channel as shown in Figure 2. Notice that the slope of 1000 and the intercept of -50.00 are due to the settings previously selected in Software Configuration Section. These settings correspond to a full scale (1.0 volt) value of 950 micrograms per cubic meter ($\mu g/m^3$).

> **NOTE:** If the earlier TEOM model 1400 is used without a voltage divider, the input range of the data logger must be set to 10 volts.

Figure 1: Altitude Correction Factors

Altitude	ACF	Pressure mm Hg
100	0.997293	757.9428
200	0.9936	755.1361
300	0.989921	752.3397
400	0.986255	749.5537
500	0.982603	746.778
600	0.978964	744.0126
700	0.975339	741.2574
800	0.971727	738.5124
900	0.968128	735.7776
1000	0.964543	733.053
1100	0.960972	730.3384
1200	0.957413	727.6338
1300	0.953868	724.9393
1400	0.950335	722.2548
1500	0.946816	719.5802
1600	0.94331	716.9155
1700	0.939817	714.2607
1800	0.936336	711.6157
1900	0.932869	708.9805
2000	0.929415	706.355
2100	0.925973	703.7393
2200	0.922544	701.1333
2300	0.919127	698.5369
2400	0.915724	695.9501
2500	0.912333	693.3729
2600	0.908954	690.8053
2700	0.905588	688.2471
2800	0.902235	685.6985
2900	0.898894	683.1593
3000	0.895565	680.6294
3100	0.892249	678.109
3200	0.888945	675.5979
3300	0.885653	673.096
3400	0.882373	670.6035
3500	0.879105	668.1201
3600	0.87585	665.646
3700	0.872607	663.181
3800	0.869375	660.7252
3900	0.866156	658.2785
4000	0.862948	655.8408
4100	0.859753	653.4121
4200	0.856569	650.9924
4300	0.853397	648.5817
4400	0.850237	646.18
4500	0.847088	643.7871
4600	0.843951	641.4031
4700	0.840826	639.0279
4800	0.837712	636.6615
4900	0.83461	634.3038
5000	0.83152	631.9549
5100	0.82844	629.6147
5200	0.825373	627.2832
5300	0.822316	624.9603
5400	0.819271	622.646
5500	0.816237	620.3402
5600	0.813215	618.043
5700	0.810203	615.7543
5800	0.807203	613.4741
5900	0.804214	611.2023
6000	0.801236	608.939
6100	0.798268	606.684
6200	0.795312	604.4374
6300	0.792367	602.1991
6400	0.789433	599.9691
6500	0.78651	597.7473
6600	0.783597	595.5338
6700	0.780695	593.3284
6800	0.777804	591.1313
6900	0.774924	588.9422
7000	0.772054	586.7613
7100	0.769195	584.5885
7200	0.766347	582.4237
7300	0.763509	580.2669
7400	0.760682	578.1181
7500	0.757865	575.9772
7600	0.755058	573.8443
7700	0.752262	571.7193
7800	0.749477	569.6021
7900	0.746701	567.4928
8000	0.743936	565.3913
8100	0.741181	563.2976
8200	0.738436	561.2117
8300	0.735702	559.1334
8400	0.732977	557.0629
8500	0.730263	555
8600	0.727559	552.9448
8700	0.724865	550.8972
8800	0.72218	548.8571
8900	0.719506	546.8246
9000	0.716842	544.7997
9100	0.714187	542.7822
9200	0.711542	540.7722
9300	0.708907	538.7697
9400	0.706282	536.7745
9500	0.703667	534.7868
9600	0.701061	532.8064
9700	0.698465	530.8334
9800	0.695878	528.8676
9900	0.693302	526.9092
10000	0.690734	524.958
10100	0.688176	523.014
10200	0.685628	521.0772

ACF = 1.001*e^(-.0000371*altitude in ft)

Figure A-1: Analog Output Wiring Assignments

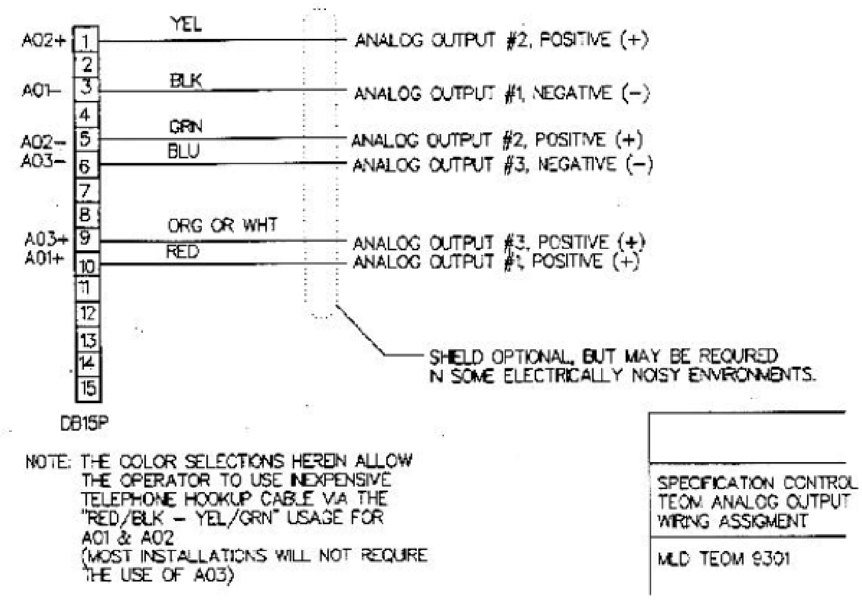

Figure A-2: ESC Data Logger and AQDAS Configurations

```
DDDDDDDDDDDDDDDDDDDDDDDD [SITE DATA LOGGER CONSOLE MODE]

CHANNEL NUMBER: 09
CHANNEL NAME: TEOM
CHANNEL TYPE: 9
STORE HOURLY AVERAGES: Y
      HOURLY SIGMAS: N
      HOURLY % VALID: N
      HOURLY RANGE: N
STORE AUX AVERAGES: N
CHANNEL UNITS: UG/M3
VOLTS FULL SCALE:  1.000
SLOPE:  1000.
INTERCEPT: -50.00
DECIMAL POSITIONER: 1
MAX READING:  950.0
MIN READING: -50.00
MAX RATE OF CHANGE:  1000.
ALARM INTERVAL [N,M,A,H]: N
BAD STATUS= XXXXXXXX XXXXXXXX
CALIBRATION TYPE: N
10-STEP CALIBRATION: N
ON-LINE: Y
DDDDDDDDDDDDDDDDDDDDDDDDDDDDDDDDDDDDDDDDDDDDDDDDDDDDDDDDDDDDDDDDDDDDDDDDDDDDDD
                    F1 - MAIN  F2 - RETURN
```

```
IMREC:  157 PAGE:  1 OF 2[CHANNEL CONFIGURATION EDITOR] MMMMMMMMMMMMMMMMMMMMMMMM
:  SITE CODE: 3900252      DATA LOGGER ID: 28      CHAN NUM: 09               :
:                          < CHANNEL DATA >                                     :
:  PARM CODE: 8110279 PARM NAME: TEOM        AGENCY:     A    PROJECT: 11      :
:  UNIT CODE: 01 UNIT NAME: UG/M3 CHAN TYPE: 9 AUX CHAN1:    AUX CHAN2:        :
:                           < STORE FLAGS FOR HOURLY DATA>                      :
:  AVERAGE:    Y         SIGMA:     N       % OF VALID: N     RANGE:     N     :
:                           < STORE FLAGS FOR AUXILIARY DATA>                   :
:  AVERAGE:    N         SIGMA:     N       % OF VALID: N     RANGE:     N     :
:                               < MISCELLANEOUS >                               :
:  RMS FLAG:   Y         AVG ENABLE: Y      COH FLAG:    N    SAMP INT:    1   :
:  SLOPE:        1000.   INTERCEPT: -50.00  DECIMAL:      1   AVG PERIOD:  1   :
:  MAXIMUM:      950.0   MINIMUM:   -50.00  MAX ROC:  1000.   PROBE HI:      6 :
:  FULL SCALE:   950   FULL VOLTS:   1.000  BAD STATUS: XXXXXXXXXXXXXXXX        :
:                              < ALARM CONTROL DATA >                           :
:  ALARM LINE:           ALARM TYPE:      (N,M,A,H)                            :
:  HIGH LIMIT:           LOW LIMIT:              ROC LIMIT:                    :
:                                                                               :
:   F1-MAIN  F2-RETRN F3-SAVE            F5-NSCRN          F7-PRINT            :
MMMMMMMMMMMMMMMMMMMMMMMMMMMMMMMMMMMMMMMMMMMMMMMMMMMMMMMC CENTRAL WKST'N   - 17MMM<
```

Figure B-1: Sample Monthly Maintenance Sheet

SOUTH COAST AIR QUALITY MANAGEMENT DISTRICT
MONTHLY QUALITY CONTROL
MAINTENANCE CHECKSHEET
TEOM

STATION NAME:_____ MONTH/YEAR:_____
STATION NUMBER:_____ TECHNICIAN:_____
PROPERTY NUMBER:_____ REVIEWED BY_____

FUNCTION	DIGITAL DISPLAY READINGS				
DATE CHECKED					
CURRENT STATUS CODE					
CURRENT OPERATING CODE					
% OF FILTER LIFETIME USED					
MASS CONCENTRATION					
DATA LOGGER READING					
CASE TEMPERATURE					
AIR TEMPERATURE					
CAP TEMPERATURE					
ENCLOSURE TEMPERATURE					
MAIN FLOW					
AUXILIARY FLOW					
NOISE					

BIWEEKLY PRECISION CHECKS

DATE	TOTAL FLOW			MAIN FLOW			AVERAGE PRESS/TEMP SETTING	
	INDICATED	LPM	% DIFF FROM 16.67	INDICATED	LPM	% DIFF FROM 3.00	PRESSURE	TEMPERATURE

OPERATOR INSTRUCTIONS:

1. Daily Check: Status Light, Percent of Filter (Record Weekly), Chart Trace.
2. Weekly Check: Record values of TEOM's digital display.
3. Every two weeks: Record results of flow check, average pressure and temperature settings. If percent difference of flow rate is > 5.0% notify supervisor.
4. Every 6 months: As-is and final flow controller software calibration. Date last preformed_____
5. Every 6 months: Clean down tube, replace main flow inline filter, leak check and filter test & clean PM10 head Date last preformed_____
6. Yearly Check: Analog In/Out calibration. Date last preformed_____
7. Every 2 years: Mass transducer calibration verification. Date last preformed_____
8. As Required: replace microfilter @ 90% loading Date last preformed _____
   replace flow splitter every other microfilter Date last preformed _____

COMMENTS OR MAINTENANCE PERFORMED

DATE	

Figure B-2: TEOM Software Calibration Datasheet

TEOM SOFTWARE CALIBRATION DATASHEET

IDENTIFICATION

SITE NAME:	AGENCY:	ELEVATION:
SITE NUMBER:	AMBIENT TEMP (In Celsius):	AMBIENT PRESS (in mmHg):
DATE:	PROPERTY#:	TEMP/PRESS CORRECTION FACTOR (1)

CALIBRATION STANDARDS

STANDARD:	I.D. #:	CERTIFICATION DATE:
CERTIFIED RANGE		
SLOPE		
INTERCEPT		

TEOM READING	AS-IS			FINAL		
	BOTH	MAIN	AUX	BOTH	MAIN	AUX
FLOWRATE SETPOINT						
Oind(display) LPM						
AVG TEMP SETTING						
AVG PRESS SETTING						
FLOW ADJ SETTING						

TRANS STD READING	AS-IS			FINAL		
	TOTAL	MAIN	AUX	TOTAL	MAIN	AUX
MFM Display						
SLPM (Ostd)						
LPM (Oa) (2)						

RESULTS	AS-IS			FINAL		
	TOTAL	MAIN	AUX	TOTAL	MAIN	AUX
Dev from 16.67 (3)						
Dev from Tran Std (4)						
Ostd(calc) @ Set (5)						
Dev from Tran Std (6)						
Z Filter CK (ug/m^3)						
Leak Test (LPM)						

EQUATIONS:

(1) $T/P\ Corr\ Factor = \frac{760mmHg}{Pa\ mmHg} \times \frac{Ta + 273\ C}{298\ C}$

(2) $Qa = T/P\ Corr\ Factor \times Qstd$

(3) $\%Dev(tf) = \frac{Qa - 16.67\ LPM}{16.67\ LPM} \times 100$

(4) $\%Dev(ts) = \frac{Main/Aux - Qa}{Qa} \times 100$

(5) $Qstd(calc) = Set\ pt \times \frac{Pavg}{1.00\ atm} \times \frac{298\ C}{Tavg + 273\ C}$

(6) $\%Dev(calc) = \frac{Qstd(calc) - Qstd}{Qstd} \times 100$

Where:

Pa	= Ambient Pressure (outdoor)
Ta	= Ambient Temp (outdoor)
Qa	= Volumetric Flow (LPM)
Qstd	= Standard Flow (SLPM)
SetPt	= Flowrate Setpoint
%Dev(tf)	= % Dev from 16.67 (total flow)
% Dev(ts)	= % Dev from Transfer Std
Main/Aux	= Main or Aux Display Flow
Qstd(calc)	= Calculated Main Flow (SLPM)
Pavg	= Average Press Setting
Tavg	= Average Temp Setting
%Dev(calc)	= % Dev from Transfer Std

Comments/Maintenance Performed:_____

MLD-127 (01/95) Calibrated by:_____ Checked by:_____

Figure B-3: TEOM Calibration Report

R&P TEOM PM10 MONITOR
CALIBRATION REPORT

TO:
FROM:

LOG NUMBER:
CALIBRATION DATE:
REPORT DATE:

IDENTIFICATION

Instrument: R&P TEOM	Site Name:
Model Number:	Site Number:
Property Number:	Site Location:
Serial Number:	
Previous Calibration Log Number:	Agency:
Elevation: Amb. Pressure:	Ambient Temperature: degC

CALIBRATION STANDARDS

STANDARD	I.D. NUMBER	CERTIFICATION DATE	CERTIFIED VALUE OR FACTOR

CALIBRATION RESULTS

FUNCTION	AS IS	FINAL
% Deviation of Total Flow from 16.67 LPM		
% Deviation of Calc Main SLPM from Transfer Std		
Main/Auxiliary Flowrate (LPM) Setpoint	/	/
Average Temp (degC) / Press (atm) Setting	/	/
Main/Auxiliary Flow Adjustment Setting	/	/
Zero Fliter Reading (ug/m^3)		
Leak Test Flowrate Display Main/Auxiliary (LPM)	/	/
Analog Calibration. Date Last Performed		
MFC Hardware Calibration. Date Last Performed		
Mass Transducer Verification. Date Last Performed.		

COMMENTS

Calibrated By_____ Checked By_____

South Coast Air Quality Management District
Science and Technology Advancement

Monitoring and Analysis Division
Atmospheric Measurements Branch

STANDARD OPERATING PROCEDURE

FOR CALIBRATION OF

TEOM SERIES 1400a/1400ab AMBIENT PARTICULATE (PM_{10}) MONITOR

SOP00115
Version 1.0
April 2, 2010

PREPARATION, REVIEWS AND APPROVALS

Standard Operating Procedure for Calibration of
TEOM Series 1400a/1400ab PM_{10} Monitor

Prepared By: _____ Date: 4-2-10
G. Brian Speaks
Air Quality Instrument Specialist II

Reviewed By: _____ Date: 4-2-10
Don Jacobs
Senior Air Quality Instrument Specialist

Reviewed By: _____ Date: 4-2-10
David Sawyer
Principal Air Quality Instrument Specialist

Approved By: _____ Date: 4-2-10
Philip M. Fine, Ph. D.
Manager, Atmospheric Measurements

Quality Assurance Approval:

Approved By: _____ Date: 04-02-10
Jason C. Low, Ph. D.
Manager, Quality Assurance

REVISION HISTORY

Standard Operating Procedure for Calibration of
TEOM Series 1400a/1400ab PM_{10} Monitor

Version	Date
1.0	April 2, 2010

REVISION CHANGES FROM PREVIOUS VERSION

Standard Operating Procedure for Calibration of
TEOM Series 1400a/1400ab PM_{10} Monitor

Section	Revisions
N/A	N/A

TABLE OF CONTENTS

Standard Operating Procedure for Calibration of
TEOM Series 1400a/1400ab PM_{10} Monitor

		Page Number
1.0	**GENERAL**	
1.1	Purpose	1
1.2	General Description and Principal of Operation	1
2.0	**APPARATUS AND EQUIPMENT**	
2.1	Sampler Equipment	2
2.2	Calibration Equipment	4
3.0	**CALIBRATION**	
3.1	Calibration Intervals	5
3.2	Flow Controller Calibration (Software)	5
3.3	Analog Calibration	8
3.4	Ambient Temperature Calibration	10
3.5	Ambient Pressure Calibration	10
3.6	Mass Transducer Verification	11
4.0	**QUALITY Control**	
4.1	Transfer Standard Certification	12
4.2	Documentation	13
FIGURES		
FIGURE 1	TEOM Control Unit	14
FIGURE 2	PM_{10} Head Exploded View	15
FIGURE 3	Flow Splitter Assembly	16
FIGURE 4	Voltmeter Lead	17
FIGURE 5	Control Unit Keypad	17
FIGURE 6	Set Temps/Flows screen	18
FIGURE 7	Analog Output Calibration (D/A)	19
FIGURE 8	Analog Input Calibration (A/D)	20
REFERENCES		21
APPENDICES		
Calibration Spreadsheets		Appendix A

1.0 GENERAL INFORMATION

1.1 Purpose:

The purpose of this Standard Operating Procedure (SOP) is to provide a set of written instructions that document calibration procedures for the series 1400a and series 1400ab TEOM. The series 1400ab operates on the same principles as the series 1400a; the major difference is that the series 1400ab has temperature and pressure sensors which are used for active flow control. The series 1400a uses user defined average values for seasonal mass flow control compensation. For simplification the TEOM will be referred to as series 1400 for the remainder of this document. It will only be referred to as series 1400a or 1400ab in cases where model specific details are applicable. This will be seen in sections describing hardware, calibration, and unit settings for operation.

1.2 General Description and Principle of Operation:

The area of toxic air pollutants has been the subject of interest and concern for many years. Recently the use of receptor models has enabled U. S. Environmental Protection Agency (EPA) to identify the elemental composition of atmospheric aerosol into components and relate them to specific emission sources. The assessment of human health impacts resulting in major decisions on control actions by federal, state, and local governments is based on these data. Accurate measures of toxic air pollutants at trace levels are essential to proper assessment.

Under the Part 53 requirements, *reference methods* for PM10 must use the measurement principle and meet other specifications set forth in 40 CFR 50, Appendix J. They must also include a PM10 sampler that meets the requirements specified in Subpart D of 40 CFR 53. Appendix J specifies a measurement principle based on extracting an air sample from the atmosphere with a powered sampler that incorporates inertial separation of the PM10 size range particles followed by collection of the PM10 particles on a filter over a 24-h period. The average PM10 concentration for the sample period is determined by dividing the net weight gain of the filter over the sample period by the total volume of air sampled. Other specifications are prescribed in Appendix J for flow rate control and measurement, flow rate measurement device calibration, filter media characteristics and performance, filter conditioning before and after sampling, filter weighing, sampler operation, and correction of sample volume to EPA reference temperature and pressure. In addition, sampler performance requirements in Subpart D of Part 53 include sampling effectiveness (the accuracy of the PM10 particle size separation capability) at each of three wind speeds and "50% cutpoint" (the primary measure of 10-micron particle size separation). Field tests for sampling precision and flow rate stability are also specified. In spite of the instrumental nature of the sampler, this method is basically a manual procedure, and all designated reference methods for PM10 are therefore defined as manual methods.

The Rupprecht and Pataschnick (R&P) PM10 monitor is based upon a tapering element oscillating microbalance (TEOM) as a filter-based measurement system to continuously measure particulate mass at concentrations between 5 µg/m3 and several g/m3 on a real-time mass monitoring basis. The instrument calculates mass rate, mass concentration,

and total mass accumulation on exchangeable filter cartridges that are designed to allow for future chemical and physical analysis. In addition, this instrument provides for hourly and daily averages. This system operates on the principal that particles are continuously collected on a filter cartridge mounted on the tip of a tapered hollow glass element. The element oscillates in an applied electric field. With this monitor, particle-laden air enters through an air inlet and then passes to the sensor unit containing the patented microbalance system. The inlet system is equipped with a sampling head to pre-separate particles at 10 µm diameter. The R&P PM10 inlet is designed to allow only particulate matter <10 µm in diameter to remain suspended in the sample air stream as long as the flow rate of the system is maintained at 16.7 L/min. The monitor can also be operated as a TSP monitor or as a PM2.5 monitor by changing the inlet head.

In operation, the sample stream passes into the microbalance system, which consists of a filter cartridge (½ inch diameter) and oscillating hollow tube, where the stream is heated to a predetermined temperature. The filter cartridge is mounted inside a ½ inch diameter thin plastic assembly. A water resistant plastic cone fits onto the oscillating element. An automatic flow controller pulls the sample stream through the monitor at flow rates between 0.5 and 5 L/min. The wider end of the hollow element is fixed to a platform and is vibrated at its natural frequency. The oscillation frequency of the glass element is maintained based on the feedback signal from an optical sensor.

As mass accumulates on the filter cartridge the resonant frequency of the element decreases resulting in a direct measurement of inertial mass. Based upon the direct relationship between mass and frequency, the monitor's microcomputer calculates the total mass accumulation on the filter and the mass rate and mass concentration in real-time.

The TEOM monitor is very sensitive to mass concentration changes and can provide precise measurements for sampling durations of 1-h or less. To achieve this level of precision, the hollow glass element must be maintained at a constant temperature to minimize the effects of thermal variations. Because the instrument's primary operating mechanism is the microbalance system, the instrument should be isolated from mechanical noise and vibration. The operating temperature of the element can be lowered to minimize the potential particle loss bias for more volatile compounds but must be maintained above the maximum ambient temperature encountered during the field sampling. The tapered element oscillating microbalance is discussed in detail in Method IO-1.3.

2.0 APPARATUS AND EQUIPMENT

2.1 Sampler Equipment:

The TEOM Series 1400 Ambient Particulate Monitor is comprised of two main components: the TEOM 1400 Control Unit and the TEOM Sensor Unit. Upon shipment the components are not fully assembled. The following section describes the components that make up the complete assembly.

1. *TEOM 1400 Control Unit:* The control unit (see Figure 1) houses the mass flow controllers and the control electronics for operation of the TEOM instrument. The main electrical and air connections to the main power supply, the auxiliary control, and the main vacuum pump connections are located on the back panel. The main power switch, status light, and the keypad for operating the control unit are located on the front panel. The keypad allows for user adjustment of various system parameters and functions once the software has been uploaded to the control unit. The red status light turns on when there is a problem with mass flow rate, temperature, or filter loading.
2. *TEOM 1400 Sensor Unit:* The sensor unit houses the mass transducer sensing unit and an electronic circuit board with the appropriate wiring for electricity and frequency signal output (inside enclosure on left hand side). Located on the outside left panel are the main electric and air connections. The enclosure houses the mass transducer sensing unit, sensor unit heater, and an amplifier circuit board that processes all signals from the mass transducer. The backside of the enclosure contains a shipping latch that secures the sensor/preheater unit when moving or shipping the instrument.
3. *TEOM Sensor/Preheater Assembly:* The TEOM® sensor/preheater assembly consists of the sensor inlet and the microbalance. The sensor inlet consists of a ½" diameter metal tube. The upper end of the tube is inserted directly into the flow splitter assembly, which allows a small portion of the total flow to be drawn through the sensor unit and the remaining air sample to be drawn through the bypass line. The lower end of the sensor inlet tube is connected to the microbalance top outer wall. The connection accommodates an air temperature probe assembly that controls the temperature of the air in the inlet tube. The ½" metal tubing between the flow splitter and the sensor unit is surrounded by thick insulation to help maintain a constant temperature of the inlet air stream. The microbalance is an insulated cylindrical enclosure that houses a metal cylinder (the sensor head) the size of the inlet tube. The metal cylinder contains an oscillating tapered element, an electronic feedback system, and a filter cartridge. The tapered element is attached to a platform at its wide end (bottom) and has a small metal tip onto which the filter cartridge sits. The electronic feedback system consists of an amplifier board, which maintains the elements oscillation, and the electronics, which allow frequency signals to be transcribed to mass units. At the bottom of the microbalance, a silicone tube, which is connected to the mass flow controller in the control unit, carries the air sample.
4. *TEOM PM10 Inlet:* The PM10 inlet (see Figure 2) is designed to allow only particulate matter <10 μm in diameter to remain suspended in the sample air stream as long as the flow rate of the system is maintained at 16.67 L/min. The monitor can be operated as a total suspended particulate monitor or as a PM10 monitor.
5. *TEOM Flow Splitter Assembly* The flow splitter assembly (see Figure 3) consists of two concentric hollow metal tubes. The outer tube is approximately 24" long and 1½" in diameter. The inner tube is approximately 12" long and ½" in diameter. The top of the assembly (outer tube) is configured to accommodate the PM10 Inlet (normal use) or the flow audit adapter (for calibration only). The

lower end of the assembly consists a pipe fitting that allows for the inner tube to enter into the outer tube and make a leak-proof connection. Also at the bottom of the flow splitter assembly is the bypass air outlet. The inner tube is connected directly to the inlet tube of the sensor unit, and the bypass air outlet is connected to the bypass air line.

6. *Electric and Air Cable Assembly* The electric and air cable assembly is used to connect the control unit to the sensor unit.
7. *Filter Cartridge* The filter cartridge is a ½" diameter thin plastic assembly. This holds the filter element in place. Attached to the base is a water resistant plastic cone that fits onto the metal tip of the oscillating element.
8. *Filter Exchange Tool* The filter exchange tool is a small fork with a 4" long handle. The lower part of the tool has two perpendicular connections. The top connection is an aluminum disc that is slightly smaller than ½" in diameter, which is made to fit over the filter face when assembling and disassembling. The bottom connection is a "U-shaped" fork. The tines of the fork straddle the cone of the filter cartridge during assembling and disassembling.
9. *Other Components* The TEOM has both a coarse and fine filter located within the sensor unit to protect additional components downstream. In addition, an oil-free pump is located in this unit to provide a constant vacuum during sampling.

2.2 Calibration Equipment:

There are a few different types of calibrations that need to take place on the TEOM at different intervals. Some of the calibrations require more equipment than others. For convenience this section will list all possible equipment needed to complete any of the various calibrations.

1. *Calibration Spreadsheets:* There is a calibration spreadsheet for the “AS IS” as well as the “FINAL” calibration of the TEOM. All pertinent data is recorded on the spreadsheet, this is essentially the record of the calibration that has taken place. See attached spreadsheets in Appendix A.
2. *Screwdriver Set*: Phillips and Slotted screwdrivers are required to remove the top and bottom panels from the TEOM control unit in order to access the Mass Flow Controllers as well as the analog output/input circuit board. Screwdrivers may also be required for removal of the plastic vacuum tubing connectors.
3. *¼” Hard Plastic Tubing:* Tubing is required for the flow check at the rear of the control unit. The coarse filters are removed and tubing is inserted in order to directly connect the flow measurement device to the control unit. It is useful if the ¼” tubing has a swage-lock ferrule to provide a better seal between flexible adaptor tubing.
4. *1/4'” Flexible Silastic Tubing:* Provides the connection between the ¼” hard tubing and the flow measurement device.
5. *Potentiometer Adjustment Tool:* There are a number of potentiometers inside the control unit that may require adjustment. The potentiometer adjustment tool makes this a much simpler task as opposed to a small screwdriver.
6. *Inlet Flow Adaptor/Valve:* This valve connects to the downtube when the PM_{10} head is removed. This allows the flow measurement device to connect to the flow path via flexible tubing. The valve is also used during a leak check. (see Figure 3)
7. *Voltmeter:* A precision voltmeter with spring loaded hook style leads (see Figure

4) and jumper wires is needed for the analog input and analog output board calibrations. The voltmeter should be a high quality unit capable of accuracy to 1 mV.

8. *Flow Measurement Device:* Typically a volumetric flow measurement device is used which is able to compensate for ambient temperature and pressure. This device must be NIST traceable and certified on an annual basis. It is possible to use a mass flow measurement device, if this is the case the readings must be converted to a volumetric flow rate using the local temperature and pressure conditions at the flow meter.
9. *Temperature Measurement Device:* If not part of the flow device a NIST traceable temperature measurement device is required. This device must be certified on an annual basis.
10. *Pressure Measurement Device:* If not part of the flow device a NIST traceable pressure measurement device is required. This device must be certified on an annual basis.
11. *Set of Mass Transducer Verification Filters:* A set of filters that are identified and accurately weighed on a precision microbalance are required for the mass transducer verification process. The filters should be re-weighed on an annual basis to verify that no additional mass has been deposited on them.
12. *Transducer Verification Filter Insertion/Removal Tool:* A separate removal tool should be used to specifically install and remove the transducer verification filters, this will eliminate the possible deposition of dirt or debris on the verification filters which may have collected on a stations filter removal tool. The station filter tool should be used to remove the current operating filter prior to the transducer verification, and to re-install the operating filter following the verification.

3.0 CALIBRATION

3.1 Calibration Intervals

Procedure	Interval
Flow Controller Calibration (Software)	6 Months
Analog Calibration	1 Year
Ambient Temperature Calibration	1 Year
Ambient Pressure Calibration	1 Year
Mass Transducer Calibration (K_O Verification)	1 Year
Flow Controller Calibration (Hardware)	As Needed

3.2 Flow Controller Calibration (Software)

The flow controller software calibration is to be performed every 6 months. If a full calibration is being performed the analog calibration, temperature calibration, and pressure calibration should be performed prior to the software calibration. The software calibration allows the user to calibrate the main and auxiliary flow rates without making any hardware adjustments. Set up any standards being used for flow, temperature, and pressure and allow them to equilibrate to local conditions for at least 30 minutes. Refer to Figure 5 for control unit keypad and Figure 6 for Set Temps/Flows Screen

descriptions. This procedure applies to both the 1400a and 1400ab, because of a few differences between these units it may be necessary to skip a few steps depending on which unit is being calibrated. This is clearly noted in the text by a phrase stating: "skip to step XX if calibrating a series 1400XX".

1. Disable the appropriate channel on the data logger.
2. Make a notation on the Chessel video chart recorder of the calibration being performed.
3. Fill out the station downtime log with the appropriate information; i.e. time, date, and reason for being offline.
4. Press the <Data Stop> key on the control unit.
5. Remove the PM_{10} head from the inlet and install the flow adaptor/valve in its place.
6. Turn on the volumetric flow measurement device and temp/pressure device if separate units. If any type of flow orifice must be installed make sure that it has a range that centers near the units total flow rate of 16.67 lpm. Allow flow device to calibrate with no flow if necessary.
7. Connect the flow measurement device to the flow adaptor.
8. Record ambient temperature, pressure, and flow rate at the roof inlet on the "AS IS" calibration spreadsheet.

Note: If the "Is Is" Flow check deviation is greater than 10%, this is considered a failure and may be cause for data invalidation. This event should be recorded in the station downtime log and Data Validation should be notified.

9. Note on series 1400ab there is active flow control based upon temperature and pressure sensors, so the unit does not need to be adjusted to local conditions. Skip to step 13.
10. On series 1400a it is necessary to adjust the unit to the current local ambient conditions at the roof inlet. On the control unit press <step screen> and scroll to "set temps/flows" press <enter>. Move the cursor down to T a/s and press <edit> press the <←> key to edit the ambient temperature. Type in the current temperature in degrees Celsius in the format <XX.X> and press <enter>. The display should now be updated with the current ambient temperature. Update the current pressure by scrolling down to P a/s and press <edit> press the <←> key to edit the ambient pressure. Type in the current pressure in atmospheres in the format <X.XXX> and press <enter>. The display should now be updated with the current ambient pressure.
11. Go back to the roof inlet and re-check and record the flow at the local ambient conditions. Record this value on the "AS IS" calibration spreadsheet.
12. Perform a leak check on the system to ensure there are no leaks prior to any tubing disassembly. Close the valve on the roof inlet flow adaptor. On the control unit main menu scroll down so that "Main Flow" and "Aux Flow" are displayed. Record the display values on the "AS IS" spreadsheet. For the series 1400a TEOM both the Aux and Main flow reading should be less than 0.15 lpm. For the series 1400ab the Main flow reading should be less than 0.15 lpm during a leak check and the Aux flow reading should be less than 0.65 lpm during a leak check.

If flow is out of tolerance refer to the operations manual for leak test troubleshooting procedures.

13. Open the flow adaptor valve very slowly so as not to cause a large pressure wave that could damage the filter element, if damaged the filter material can become lodged in the flow path causing flow errors as well as calculation errors.
14. Leave the flow adaptor in place on the roof inlet for later use.
15. Turn the TEOM control unit off.
16. Unplug the electrical cable from the control unit that links it to the sensor unit.
17. Remove the mounting bracket with the inline filters and flow lines from the back of the control unit.
18. Turn the control unit back on and make sure the pump is running.
19. Enter the set temps and flows screen by pressing <step screen> scroll to "set temps/flows" and press <enter>.
20. Scroll down so that "F-Main" and "F-Aux" are displayed and record the set points on the calibration spreadsheet. The set point is the column on the left and the current instrument reading is the column on the right.
21. It is necessary to update the temperature and pressure readings to the conditions inside the station on both the series 1400a and 1400ab. Values are only editable when in the data stop mode, if at any time the unit automatically begins to come back on line as indicated by an operating code of "1-4" it is necessary to press <data stop> so that an "S" is displayed as the operating code. Scroll down so that T a/s and P a/s are displayed. Update the same way as before; press <edit>, <←>, enter current value inside the station, and press <enter> to update.
22. Record the values on the calibration spreadsheet for "F-adj main" and "F-adj aux".
23. Attach the flow device directly to the control unit via ¼" plastic tubing and ¼" flexible silastic tubing. The bypass flow should be close to 13.67 lpm and the main flow should be close to 3.00 lpm. Insert correct orifices for flow device as required.

Note: **If the instrument is unable to attain these desired flow rates or if the flow is unusually unstable a hardware calibration or repair may be called for.**

24. For bypass flow connect tubing to the "bypass flow" port on control unit. Scroll down so that "F-aux" is displayed record values from the instrument reading as well as the flow device reading on the spreadsheet.
25. Scroll to "F-adj aux" and press <edit> use the <↑> or <↓> keys to make an adjustment. Press <enter> to confirm the adjustment. Number values can be entered if preferred instead of using the arrow keys, this may be necessary for fine tuning of the variable. Record the variable before adjustment on the "AS IS" spreadsheet. Adjust the variable until the flow measurement device shows a reading of 13.67 lpm. Record this value along with the new instrument reading and the new value for "F-adj aux" on the "FINAL" calibration spreadsheet.
26. Repeat the same process for the main flow, connect the tubing to the port labeled "sensor flow". Adjustment of the "F-adj main" variable is required and the target flow is 3.00 lpm. Record values before adjustment on the "AS IS" spreadsheet,

and values after adjustment on the "FINAL" spreadsheet.

27. If unable to adjust flow to the correct set point through a software adjustment a flow controller hardware adjustment is necessary. Refer to section 8.4 of the operating manual for details.
28. Re-assemble all control unit tubing and filters.
29. Update the T a/s and P a/s settings back to the ambient conditions and re-test flow at roof inlet. Record values on the "FINAL" spreadsheet.
30. Perform a post calibration leak test to ensure that no leaks were created during the calibration. Record values for the leak test on the "FINAL" calibration spreadsheet. Open valve slowly to avoid a large pressure wave.
31. Remove flow adaptor and re-install PM_{10} head on the roof inlet.
32. Turn the unit off, re-attach sensor unit plug, and turn unit back on.
33. It is important to note the difference in temperature and pressure settings for the 1400a and 1400ab series TEOM.
34. The 1400a T a/s and P a/s settings are as follows:
    Ta = 25.0 Ts = 25.0
    Pa = 1.000 Ps = 1.000
    Return the set temps and flows readings to those shown for valid data generation.
35. The 1400ab T a/s and P a/s settings are as follows:
    Ta = 99.0 Ts = 25.0
    Pa = 9.000 Ps = 1.000
    Return the set temps and flows readings to those shown for valid data generation. The series 1400ab needs the different values in order for the unit to recognize the ambient pressure and temperature sensors.
36. Press the <run> key to bring the unit back online. The initialization process takes approximately 30 minutes.
37. Check that the mass concentration and noise levels appear to be normal, if not let the unit stabilize until readings appear normal. It may be necessary to press <data stop> followed by <run> again if the noise readings seem to be very high.
38. Once stable enable the appropriate channel on the data logger, and record the time placed back online on the station downtime log.
39. Enter all pertinent information recorded on the calibration spreadsheets in to the instrument log book.

3.3 Analog Calibration

The analog calibration needs to be performed on an annual basis. There are two components to the analog calibration; the analog output calibration (D/A) and the analog input calibration (A/D). The D/A calibration should be performed first followed by the A/D calibration.

1. Set up voltmeter and allow it to equilibrate to local conditions for at least 30 minutes.
2. Disable the appropriate channel on the data logger.
3. Make a notation on the Chessel video chart recorder of the calibration being performed.
4. Fill out the station downtime log with the appropriate information; i.e. time, date, and reason for being offline.

5. Perform an "AS IS" flow check as outlined in section 3.2 Flow Controller Calibration (Software) steps 5-27. NOTE: do not make any adjustments to the "F-adj main" or "F-adj aux" aux variables prior to completion of the analog calibration.
6. Turn the TEOM control unit off.
7. Unplug the electrical cable from the control unit that links it to the sensor unit. If installed remove the ACCU connector as well.
8. Remove the cover of the control unit. This is the bottom cover on series 1400a models and it is the top cover on series 1400ab models.
9. Remove the ribbon cables connected to P2, P3, and P4 on the L-shaped analog input/output board. (Refer to figure 8-1 of the Operating Manual) Note some older models do not use the P3 connector. The P3 connector is for analog inputs 8-15, if the model being worked on only has 0-7 analog inputs just remove the P2 and P4 cables.
10. Turn the control unit back on and make sure the pump is running.
11. Press <data stop> to enter the setup mode.
12. Press <step screen> and scroll down so that "Analog Calibration" is displayed press <enter>.
13. Enter yes on the calibration line by pressing <edit> and then <yes>.
14. Move the cursor down to the "A/O Value" line and set to 90.0 by pressing <edit> and typing <90.0> and then press <enter>. This causes the output of the channels to be set to 90% of full scale. The different channels are set for either 2 VDC or 10 VDC this can be identified by the position of the jumpers W40-W47 on the board. Refer to Figure 8-1 of the Operating Manual for the jumper setting of each channel.

Follow these steps to calibrate the analog output (D/A) section of the analog card:

15. Place the "+" lead of the voltmeter on the white analog output test point "0", and the "-" lead on a black "GND" (ground) test point. (See Figure 7)
16. Monitor the voltmeter for the proper readout. If on a 10 VDC channel the expected reading is 90% of full scale or 9.000 VDC, if on a 2 VDC channel the expected reading is 90% of full scale or 1.800 VDC. If the voltmeter reading is off by more than 2 mV adjust the GAIN ADJUSTMENT potentiometer for the channel being calibrated.
17. Move the "+" lead of the voltmeter to successive analog output channels, and adjust the appropriate potentiometer if necessary.

Follow these steps to calibrate the analog input (A/D) section of the analog card:

18. Place the "+" lead of the meter on the "0" test point of the analog outputs. Connect the lead from the analog output "0" test point to the red analog input "0" test point with a jumper. (See Figure 8).
19. With the "A/O value" still set at 90.00 move the cursor down to the line which says "A/I Chan" make sure this reads channel "0"as indicated by the number on the left. The value on the right should also read "90.00" this is the percentage of full scale that the analog input is reading. If this value differs from 90.00 adjust the appropriate input channel potentiometer to achieve the proper percentage.
20. Move the jumper to the analog input channel "1" test point. Update the control unit so that it displays the percentage of full scale for this channel by pressing

<edit> and then pressing <1> then <enter>. Adjust the potentiometer if required.

21. Repeat step 20 for the remaining analog input channels. Some of the older units only have channels 0-7 for inputs while others may have channels 0-15. Test all channels present.
22. Once the analog input calibration is complete, turn off the power and re-attach the ribbon cables.
23. Return the "A/I chan" value to "0", the "A/O" Value to "0", and the "calibrate" value to "no".
24. If calibrating a series 1400ab turn the unit back on and move on to the pressure and temperature calibrations.
25. If calibrating a series 1400a replace the bottom cover, turn the unit back on, and complete the flow controller software calibration, continuing from step 24.

3.4 Ambient Temperature Calibration

The ambient temperature calibration needs to be performed on an annual basis. A complete analog calibration (section 3.3) must be performed prior to the temperature calibration. This procedure is only required on the series 1400ab TEOM.

1. The 1400ab T a/s and P a/s settings for temp calibration need to be set at:
   Ta = 99.0 Ts = 25.0
   Pa = 9.000 Ps = 1.000
   Return the set temps and flows readings to those shown if required.
2. Obtain the current temperature at the ambient temperature probe in degrees Celsius (°C).
3. Display the ambient temperature reading in the Set Temps/Flows screen. (see Figure 6)
4. Locate and adjust the potentiometer for analog input 8 on the analog board until the ambient temperature matches the actual temperature reading.
5. Wait 30 seconds for the temperature to stabilize and re-adjust if necessary.
6. Move on to the Ambient Pressure Calibration.

3.5 Ambient Pressure Calibration

The ambient pressure calibration needs to be performed on an annual basis. A complete analog calibration (section 3.3) must be performed prior to the pressure calibration. This procedure is only required on the series 1400ab TEOM.

1. The 1400ab T a/s and P a/s settings for temp calibration need to be set at:
   Ta = 99.0 Ts = 25.0
   Pa = 9.000 Ps = 1.000
   Return the set temps and flows readings to those shown if required.
2. Obtain the current barometric pressure (actual pressure, NOT corrected to sea level) in Atmospheres (atm).
3. Locate the interface board on the back panel of the control unit.
4. Place the positive lead of the voltmeter on the test point labeled "+10V" (red) and the negative lead on test point "GND" (black).
5. Locate potentiometer R304, and adjust until the voltmeter reads 10.000 VDC ±

0.001 V. Remove voltmeter leads.

6. Display the ambient pressure reading in the Set Temps/Flows Screen (see figure 6).
7. Adjust potentiometer R509 until the display matches the actual pressure reading.
8. Wait 30 seconds for the reading to stabilize and re-adjust if necessary.
9. Replace the top cover of the control unit and complete the flow controller software calibration, continuing from step 22.

3.6 Mass Transducer Verification

The mass transducer verification is an audit of the TEOM factory set calibration constant (K_o constant). Contact the manufacturer if the K_o constant differs by more than 2.5%. The verification is based upon the frequency of operation of the TEOM without a filter, and the frequency of operation of the TEOM with a filter of a known mass. The relationship is as follows:

$$K_o = \frac{M_{filter}}{(1 / f_0^2) - (1 / f_1^2)}$$

where:

M_{filter} = gravimetric filter mass (grams)
f_0 = frequency without filter (Hz)
f_1 = frequency with filter (Hz)

It is important to note that the majority of the TEOM samplers used by the AQMD have a feature built in that calculates the KO constant internally through the software, however there are a few older units where the constant must be manually calculated. The process will be outlined for both cases. Attempt to locate the KO Verification on the step screen menu, if it does not exist perform manual verification. A set of calibration filters must be used for this process. The filters are identified and the corresponding weights are recorded for the filters. A calibration filter removal tool is used to install and remove the calibration filters. This is done to prevent deposition of additional mass on the filters.

1. Disable the appropriate channel on the data logger.
2. Make a notation on the Chessel video chart recorder of the calibration being performed.
3. Fill out the station downtime log with the appropriate information; i.e. time, date, and reason for being offline.
4. Press the <Data Stop> key on the control unit.
5. Confirm that the Calibration Constant shown on the Set Hardware Screen is the same as that shown on the nameplate located on the left side of the mass transducer support cage. Note on some models the nameplate may be inside the mass transducer.
6. Unplug the TEOM sample pump so that no flow passes through the unit during this procedure.
7. Remove the sample filter with the filter removal tool found at the station.
8. Close the mass transducer housing assembly. Move to automatic or manual calculation depending on type of unit being calibrated.
   Automatic Calculation:

a) Enter the "KO Conformation" screen, input the weight of the pre-weighed calibration filter on the "Filt Wght" line.
b) With the system running with no filter wait for the oscillating frequency shown in the upper right hand corner of the screen to reach a stable maximum value.
c) Press the <First/Last> key to record the frequency "f_o".
d) Install the calibration verification filter in the instrument and wait for the frequency to stabilize at a new value. (Use the calibration filter removal tool)
e) Press the <First/Last> key to record the frequency "f_1".
f) The instrument then automatically computes and displays the audit value of the calibration constant, K_o on the "Audit KO" line. Record the Factory KO and the Audit KO on the calibration spreadsheet.

Manual Calculation:

a) With the system running with no filter wait for the operating frequency shown on the last line of the main screen to reach a stable maximum value. Record this value as f_0.
g) Install the calibration verification filter in the instrument and wait for the frequency to stabilize at a new value. Record this value as f_1. (Use the calibration filter removal tool)
b) Calculate the Audit KO value based upon the weight of the calibration filter, f_0, and f_1. Record the Factory KO and the Audit KO on the calibration spreadsheet.

Finishing Steps:

9. Remove the calibration verification filter. (Use the calibration filter removal tool)
10. Install a new operating filter using the station filter removal tool.
11. Plug the TEOM sample pump back in.
12. Press the <run> key to bring the unit back online. The initialization process takes approximately 30 minutes.
13. Check that the mass concentration and noise levels appear to be normal, if not let the unit stabilize until readings appear normal. It may be necessary to press <data stop> followed by <run> again if the noise readings seem to be very high.
14. Once stable enable the appropriate channel on the data logger, and record the time placed back online on the station downtime log.
15. Enter all pertinent information recorded on the calibration spreadsheet in to the instrument log book.

4.0 Quality Control

4.1 Transfer Standard Certifications

The entire calibration process is performed in order to ensure the validity of any field data that is generated. The validity is based upon the certification on a prescribed interval using NIST traceable certified transfer standards. It is important to identify any transfer standards used in a field calibration and their corresponding certification date. Each transfer standard has a record of its calibration which is kept at HQ in order to document the necessary traceability. In regards to the flow, temperature, and pressure measurement

devices used in a TEOM calibration, each of these (if separate devices) must be re-certified on an annual basis.

4.2 Documentation

The calibration of the TEOM needs to be documented in multiple ways. First a calibration spreadsheet must be filled out for each calibration performed. There is a separate spreadsheet for an As Is calibration and a Final calibration. The As Is calibration is basically a flow verification of the instrument as found prior to making any adjustments. The Final calibration is a record of the as left conditions following a calibration. Both the As Is and Final calibration information should be recorded fully in the instrument log book. A calibration card is also filled out following a Final calibration and is generally left in the card slot on the instrument. This identifies any key set points, date calibrated, and the calibration technician. Lastly the completed As Is and Final calibration files need to be uploaded on the calibration network drive for the given station. They are placed in the TEOM subfolder of said station. This provides a safe and accessible location for file storage.

FIGURES

Figure 1: TEOM Control Unit

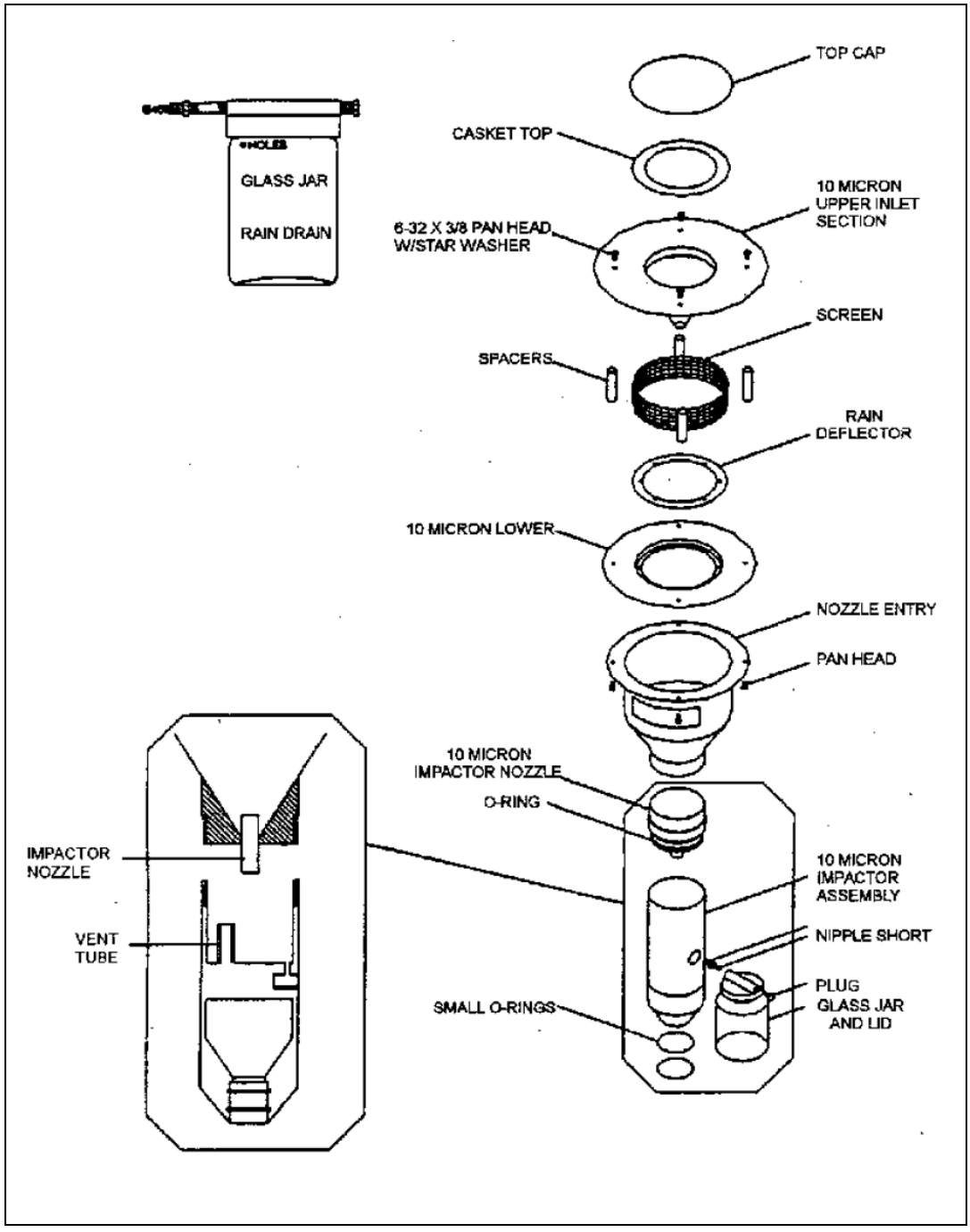

Figure 2: PM_{10} Head Exploded View

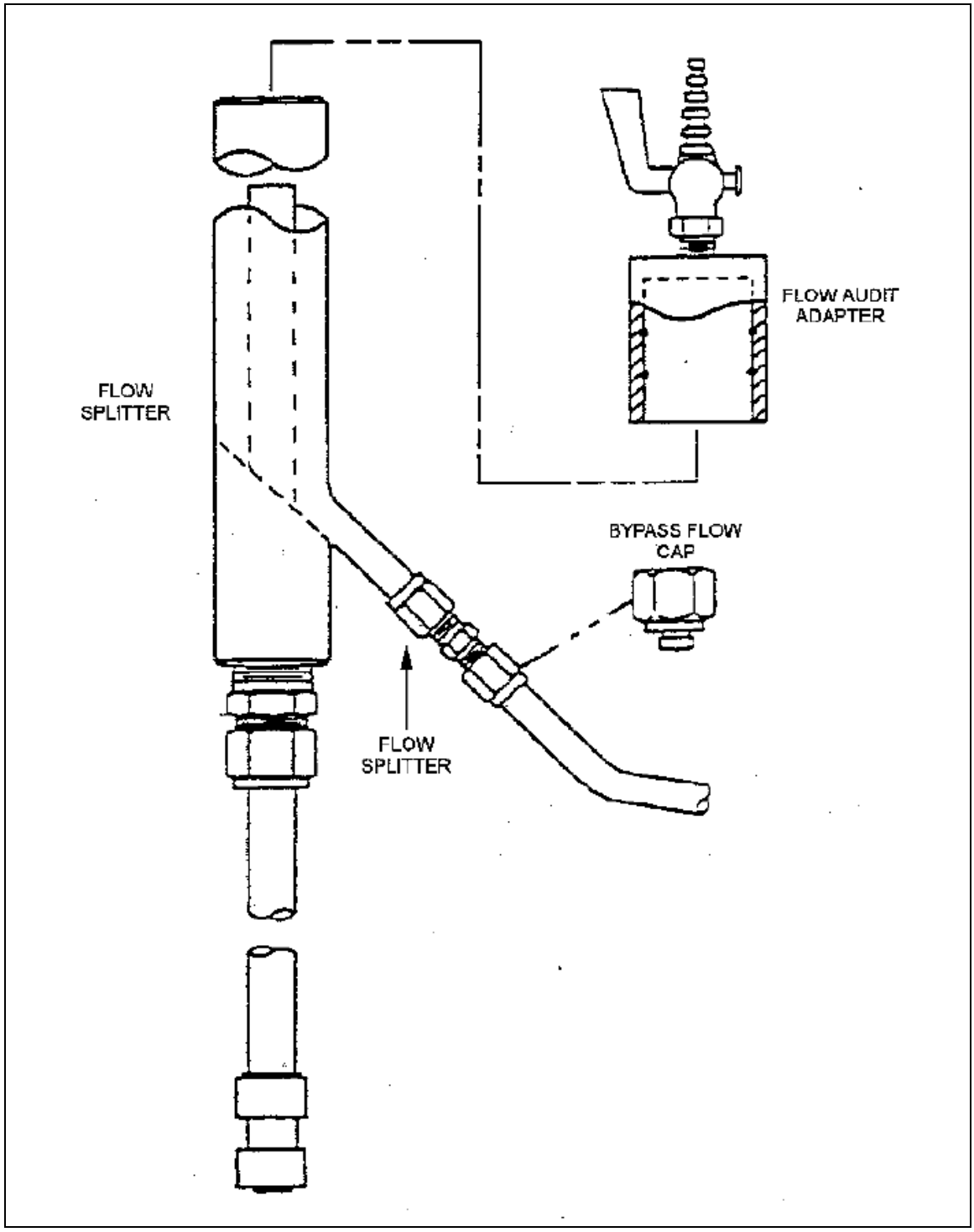

Figure 3: Flow Splitter Assembly

Figure 4: Voltmeter Lead

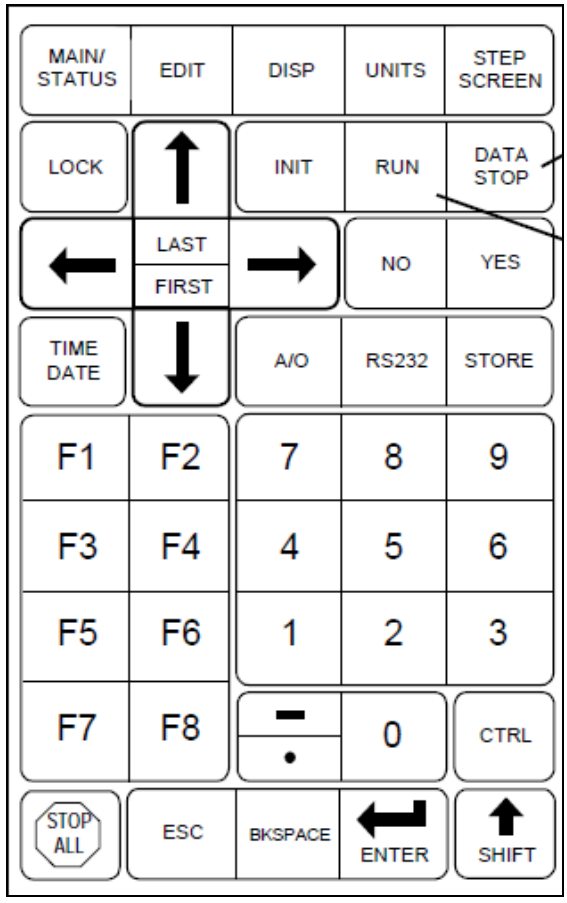

Figure 5: Control Unit Keypad

SET TEMPS/FLOWS		
T-Case>	50.00	50.00
T-Air	50.00	50.01
T-Cap	50.00	49.98
F-Main	3.00	3.00
F-Aux	10.00	9.98
T-A/S	25.00	25.00
P-A/S	1.000	1.000
Amb Temp		23.4
Amb Pres		0.988
FAdj Main		1.000
FAdj Aux		1.000

Figure 6: Set Temps/Flows Screen

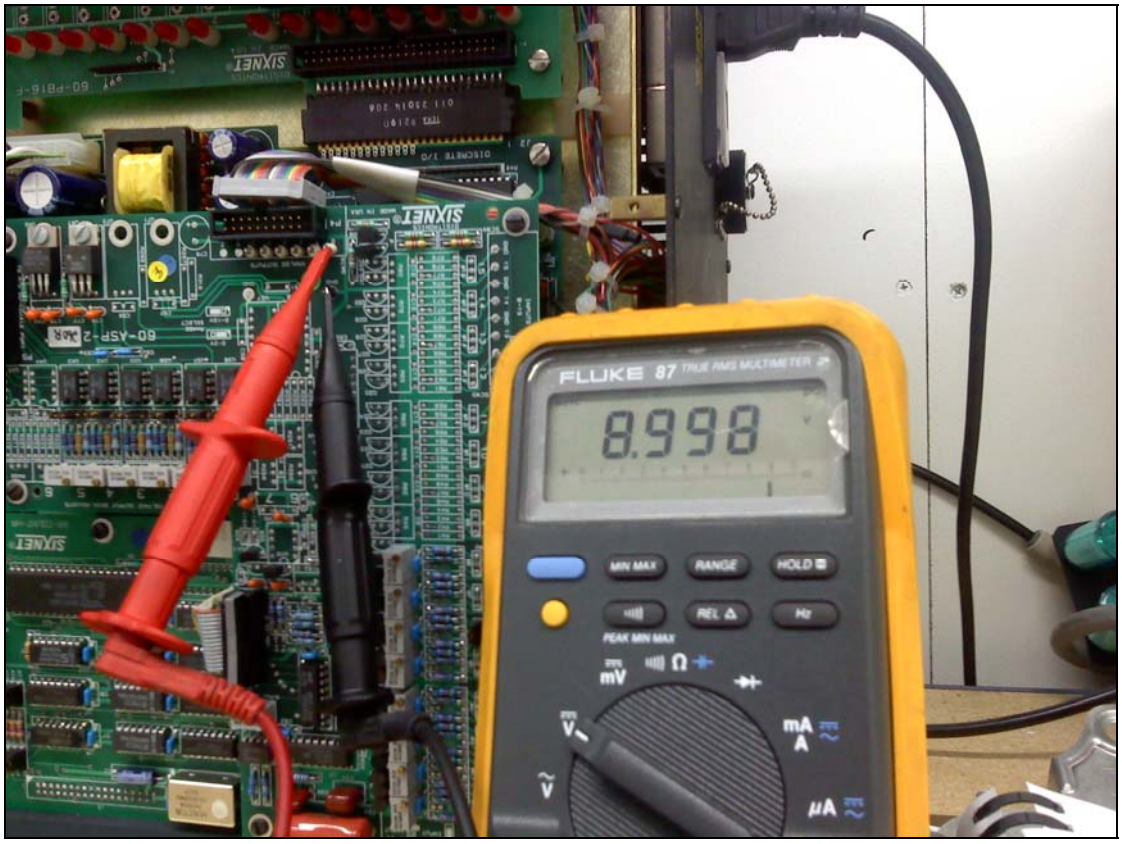

Figure 7: Analog Output Calibration (D/A)

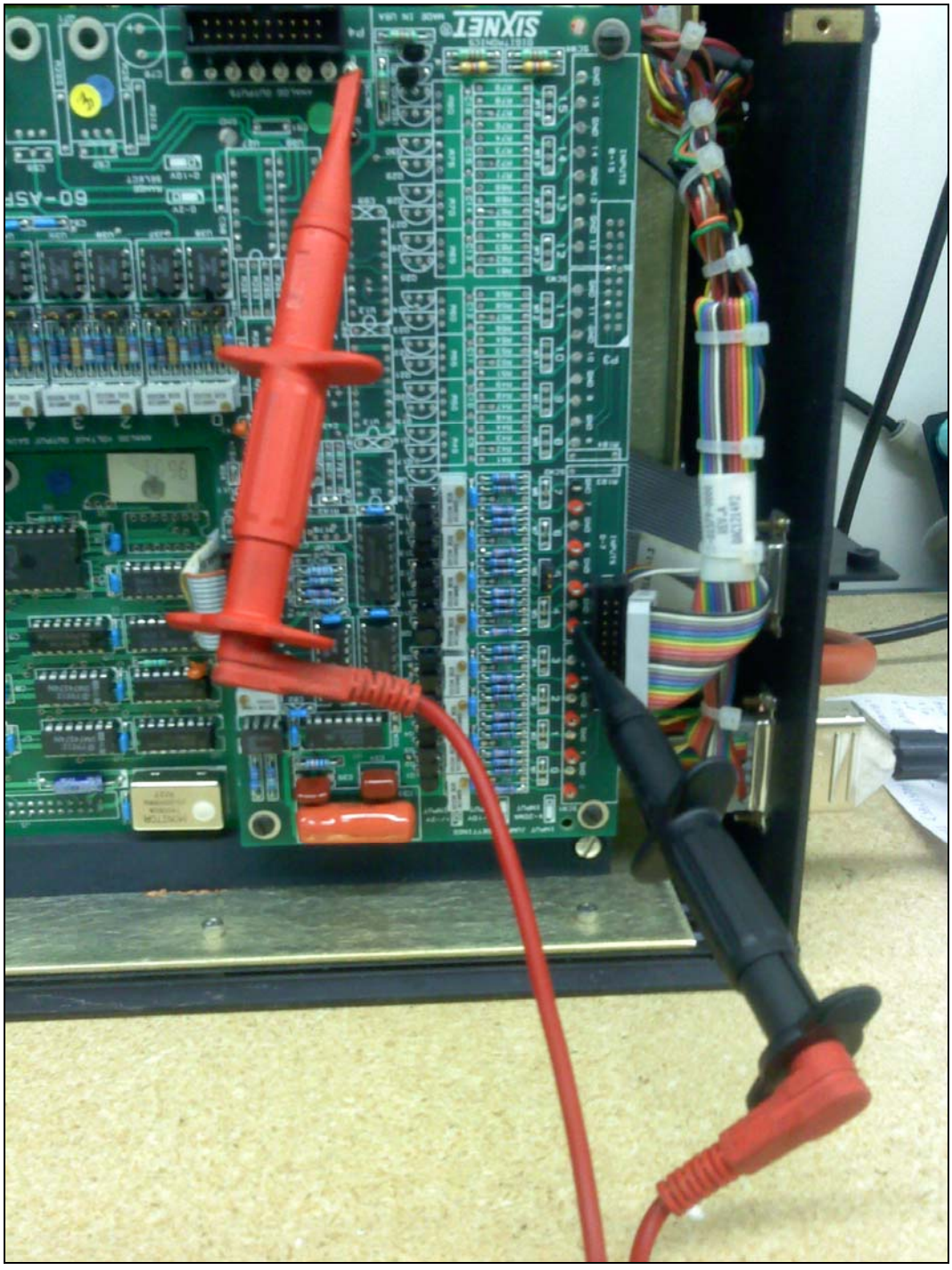

Figure 8: Analog Input Calibration (A/D)

References

1. TEOM Series 1400a Ambient Particulate (PM10) Monitor *Operating Manual*
   Revision 2.10 August 1992
   EPA Designation No. EQPM-1090-079
2. TEOM Series 1400a Ambient Particulate (PM10) Monitor *Operating Manual(ab serial numbers)*
   42-003347 Revision B September 2008
   EPA Designation No. EQPM-1090-079
3. TEOM Series 1400a Ambient Particulate (PM10) Monitor *Service Manual(ab serial numbers)*
   42-003348 Revision B April 2004
4. Compendium of Methods for the Determination of Inorganic Compounds in Ambient Air *Continuous Measurement of PM10 Suspended Particulate Matter (SPM) in Ambient Air (Overview)* (EPA/625/R-96/010a) Method IO-1.1 Center for Environmental Research Information June 1999
5. Compendium of Methods for the Determination of Inorganic Compounds in Ambient Air *Determination of PM10 in Ambient Air Using a Continuous Rupprecht and Patashnick (R&P) TEOM Particle Monitor* (EPA/625/R-96/010a) Method IO-1.3 Center for Environmental Research Information June 1999

APPENDIX A
CALIBRATION SPREADSHEETS

TEOM PM10 AS IS FLOW CALIBRATION

Station #: _____ Location: _____
Property #: _____ Transfer Std: _____
Date: _____ T. Std Cal Date: _____

Calibration Technician(s): _____

Flow Check at Roof Inlet

Ambient Temp: _____ °C Ambient Press: _____ mm Hg
As Is Inlet Flow: _____ lpm = 0.000 atm
Deviation from 16.67: -100.0 %

Note: When Calibrating TEOM adjust T & P values to conditions inside station

Ta = 0.0 °C Ts = 25.0 °C
Pa = 0.000 atm Ps = 1.000 atm

Inlet Flow @ Local Cond: _____ lpm Leak Check Aux: _____ lpm
Deviation from 16.67: -100.0 % Main: _____ lpm

Flow Check at Rear of Instrument

Note: If Calibrating TEOM series 1400a adjust T & P values to conditions inside station (N/A on 1400ab)

Ta = _____ °C Ts = 25.0 °C
Pa = _____ atm Ps = 1.000 atm

$F_{ADJ\text{-}AUX}$ _____ $F_{ADJ\text{-}MAIN}$ _____

	Transfer Std.	% Dev.	Instrument Display	Instrument Set Point
Aux Flow (lpm)		-100.0		13.67
Main Flow (lpm)		-100.0		3.00

Note: If Calibrating TEOM series 1400a adjust T & P values back to set point of 25.0 and 1.000 when complete
Note: If only performing an AS IS Flow Calibration perform leak check on instrument following tubing re-assembly

Leak Check Aux: _____ lpm
Main: _____ lpm

TEOM PM10 FINAL FLOW CALIBRATION

Station #: _____ Location: _____
Property #: _____ Transfer Std: _____
Date: _____ T. Std Cal Date: _____

Calibration Technician(s): _____

Performed D/A Calibration: _____ Performed A/D Calibration: _____

Final Flow Check at Rear of Instrument

Note: When Calibrating TEOM adjust T & P values to conditions inside station

Ta = _____ °C Ts = 25.0 °C
Pa = _____ atm Ps = 1.000 atm

$F_{ADJ-AUX}$ _____ $F_{ADJ-MAIN}$ _____

	Transfer Std.	% Dev.	Instrument Display	Instrument Set Point
Aux Flow (lpm)		-100.0		13.67
Main Flow (lpm)		-100.0		3.00

KO Constant Set Point: _____ Calculated KO Constant: _____
Deviation: #DIV/0! %

Note: If Calibrating TEOM series 1400a adjust T & P values back to set point of 25.0 and 1.000 when complete
Note: Following Flow Calibration perform leak check on instrument after tubing re-assembly

Leak Check Aux: _____ lpm
Main: _____ lpm

Inlet Flow @ Local Cond: _____ lpm
Deviation from 16.67: -100.0 %