Parts List for the Carrier Legacy EES (Engine Emissions System)
X2 Series

Relating to Executive Order DE-14-007

Effective Date: November 13, 2014

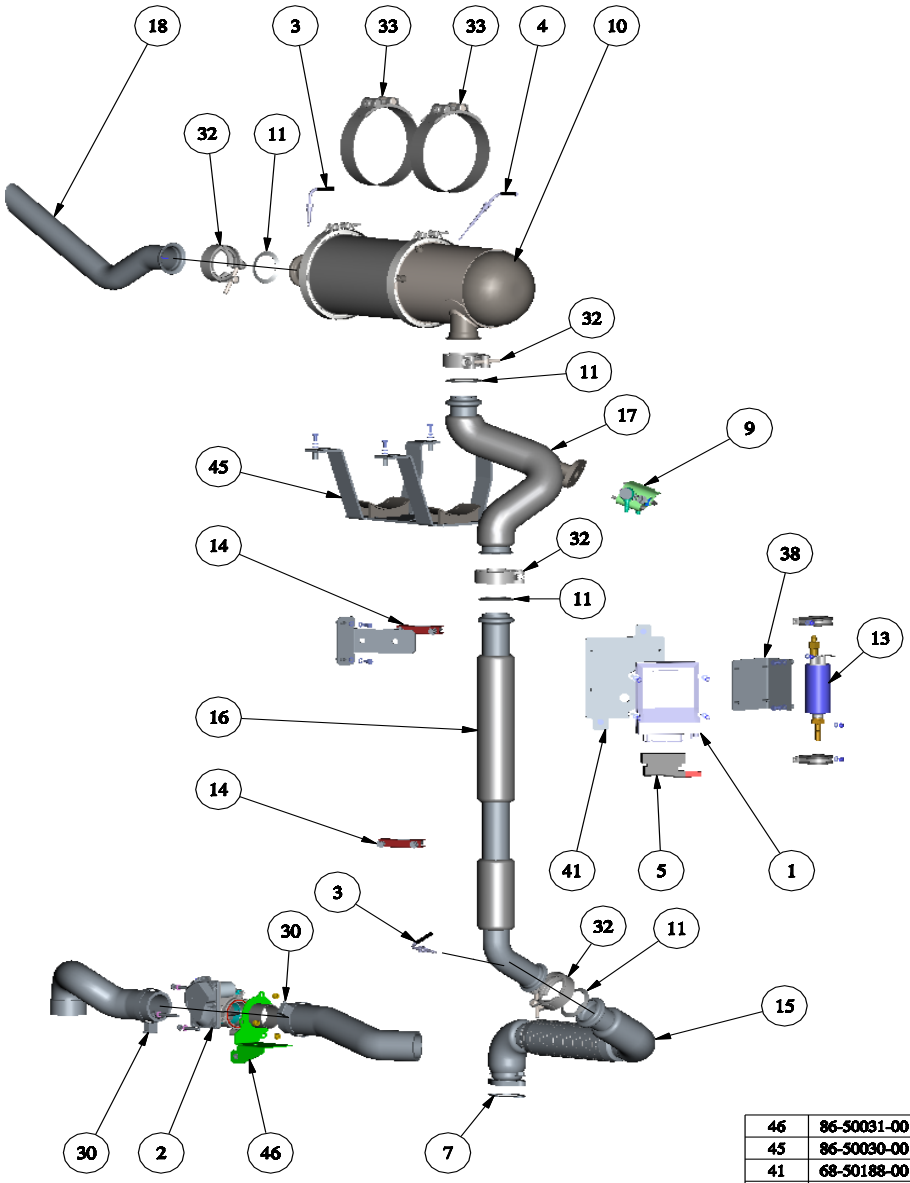

ITEM	PART NUMBER	QTY	DESCRIPTION
46	86-50031-00	1	BRACKET ASSY (THROTTLE)
45	86-50030-00	1	BRACKET ASSY (DOC/DPF)
41	68-50188-00	1	BRACKET CONTROLLER
38	68-50189-00	1	BRACKET PUMP
33	44-00486-00	2	CLAMP DPF, EES
32	44-00485-00	4	CLAMP, EXHAUST EES
30	44-00045-05	2	CLAMP, HOSE 2.06" - 3.00" WORM TYPE
18	30-50359-00	1	PIPE EXHAUST, TIP
17	30-50361-00	1	PIPE EXHAUST, INJECTOR
16	30-50360-00	1	PIPE EXHAUST, INTERIM
15	30-50356-00	1	PIPE EXHAUST, VIBRATION
14	30-01052-05	2	CLAMP, "U" (52mm DIA)
13	30-00532-00	1	FUEL PUMP, AR-DOC
11	30-00514-00	4	GASKET (2" ID LOW LEAKAGE)
10	30-50364-01	1	FILTER ASSY (DOC/DPF)
9	30-00499-01	1	VALVE SOLENOID (NOZZLE)
7	25-37238-00	1	GASKET, EXHAUST
5	22-50430-00	1	HARNESS, EES LEGACY
4	12-00740-00	1	SENSOR, TEMP ESFIT
3	12-00737-00	2	SENSOR, TEMP ESFOT & ESHIT
2	12-00736-00	1	VALVE, THROTTLE
1	12-00718-00	1	CONTROLLER, EES

CARRIER X2 SERIES
EES LEGACY COMPONENTS