State of California
AIR RESOURCES BOARD

EXECUTIVE ORDER D-115-2
Relating to Exemptions under Section 27156
of the Vehicle Code

HOLLEY REPLACEMENT PARTS DIVISION
COLT INDUSTRIES OPERATING CORP.
THROTTLE BODY INJECTION SYSTEM
FOR GM 1.8L, 2.0L, AND 2.5L ENGINES

Pursuant to the authority vested in the Air Resources Board by Section 27156 of the Vehicle Code; and

Pursuant to the authority vested in the undersigned by Sections 39515 and 39516 of the Health and Safety Code and Executive Order G-45-5;

IT IS ORDERED AND RESOLVED: That the installation of the Holley throttle body injection system, model 3739, manufactured by Holley Replacement Parts Division, Colt Industries Operating Corporation, of 11955 East Nine Mile Road, Warren, Michigan 48090, has been found not to reduce the effectiveness of required motor vehicle pollution control devices and, therefore, is exempt from the prohibitions of Section 27156 of the Vehicle Code for the following General Motors (GM) Corporation vehicles originally equipped with throttle body injection system:

Model Year	Vehicle Make	Engine Displacement
1982-1985	Chevrolet, Buick, Pontiac, and Oldsmobile	2.5L
1983-1985	Chevrolet, Cadillac, and Oldsmobile	2.0L
1982-1985	Buick, Pontiac, and Oldsmobile	1.8L

This Executive Order is valid provided that installation instructions for this device will not recommend tuning the vehicle to specifications different from those submitted by the device manufacturer.

Changes made to the design or operating conditions of the device, as exempted by the Air Resources Board, that adversely affect the performance of a vehicle's pollution control system shall invalidate this Executive Order.

Marketing of this device using an identification other than that shown in this Executive Order or marketing of this device for an application other than those listed in this Executive Order shall be prohibited unless prior approval is obtained from the Air Resources Board. Exemption of a kit shall not be construed as an exemption to sell, offer for sale, or advertise any component of a kit as an individual device.

This Executive Order does not constitute any opinion as to the effect that the use of this device may have on any warranty either expressed or implied by the vehicle manufacturer.

THIS EXECUTIVE ORDER DOES NOT CONSTITUTE A CERTIFICATION, ACCREDITATION, APPROVAL, OR ANY OTHER TYPE OF ENDORSEMENT BY THE AIR RESOURCES BOARD OF ANY CLAIMS OF THE APPLICANT CONCERNING ANTI-POLLUTION BENEFITS OR ANY ALLEGED BENEFITS OF THE HOLLEY THROTTLE BODY INJECTION SYSTEM, MODEL 3739.

No claim of any kind, such as "Approved by Air Resources Board" may be made with respect to the action taken herein in any advertising or other oral or written communication.

Section 17500 of the Business and Professions Code makes untrue or misleading advertising unlawful, and Section 17534 makes violation punishable as a misdemeanor.

Section 43644 of the Health and Safety Code provides as follows:

> "43644. (a) No person shall install, sell, offer for sale, or advertise, or, except in an application to the state board for certification of a device, represent, any device as a motor vehicle pollution control device for use on any used motor vehicle unless that device has been certified by the state board. No person shall sell, offer for sale, advertise, or represent any motor vehicle pollution control device as a certified device which, in fact, is not a certified device. Any violation of this subdivision is a misdemeanor."

Any apparent violation of the conditions of this Executive Order will be submitted to the Attorney General of California for such action as he deems advisable.

Executed at El Monte, California, this 11th day of October, 1985.

K. D. Drachand, Chief
Mobile Source Division

STATE OF CALIFORNIA
AIR RESOURCES BOARD

EVALUATION OF COLT INDUSTRIES HOLLEY THROTTLE BODY INJECTION SYSTEM MODEL 3739 FOR EXEMPTION FROM THE PROHIBITIONS IN SECTION 27156 OF THE VEHICLE CODE IN ACCORDANCE WITH SECTION 2222, TITLE 13 OF THE CALIFORNIA ADMINISTRATIVE CODE

OCTOBER, 1985

EVALUATION OF COLT INDUSTRIES HOLLEY THROTTLE BODY INJECTION SYSTEM MODEL 3739 FOR EXEMPTION FROM THE PROHIBITIONS IN SECTION 27156 OF THE VEHICLE CODE IN ACCORDANCE WITH SECTION 2222, TITLE 13 OF THE CALIFORNIA ADMINISTRATIVE CODE

by

MOBILE SOURCE DIVISION

State of California
AIR RESOURCES BOARD
9528 Telstar Avenue
El Monte, CA 91731

(This report has been reviewed by the staff of the California Air Resources Board and approved for publication. Approval does not signify that the contents necessarily reflect the views and policies of the Air Resources Board, nor does mention of trade names or commercial products constitute endorsement or recommendation for use.)

SUMMARY

The Holley Replacement Parts Division (Holley) of Colt Industries Operation Corporation has requested an exemption from the prohibitions in Vehicle Code Section 27156 for their throttle body injection (TBI) system model 3739. The exemption is sought for limited 1982 through 1985 General Motors (GM) Corporation vehicles originally equipped with TBI system.

Holley has submitted data from comparative cold-start CVS-75 emissions tests performed at their own test facility. Their tests were performed on a 50-state certified 1985 Oldsmobile Ciera with a 2.5 liter six-cylinder engine. Confirmatory tests were conducted on a California-certified 1985 Oldsmobile Firenza powered by a 2.0 liter engine at the Air Resources Board (ARB) Haagen-Smit Laboratory in El Monte, California.

Based on the comparative exhaust emission data, the staff has concluded that Holley has demonstrated compliance with the requirements for the exemption.

The staff recommends that Holley be granted an exemption for their TBI system model 3739 as requested and that Executive Order D-115-2 be issued.

CONTENTS

		Page Number
SUMMARY		i
CONTENTS		ii
I.	INTRODUCTION	1
II.	CONCLUSION	1
III.	RECOMMENDATIONS	2
IV.	HOLLEY TBI SYSTEM DESCRIPTION AND OPERATION	2
V.	HOLLEY TBI SYSTEM EVALUATION	4
VI.	DISCUSSION	4
APPENDICES		6
	HOLLEY TBI SYSTEM SCHEMATIC DIAGRAM	7
	OEM INJECTOR	8
	TABLE 1: HOLLEY RECOMMENDED INJECTOR	9
	TABLE 2: HOLLEY'S TEST DATA	10
	TABLE 3: ARB'S TEST DATA	11

EVALUATION OF COLT INDUSTRIES HOLLEY THROTTLE BODY INJECTION SYSTEM MODEL 3739 FOR EXEMPTION FROM THE PROHIBITIONS IN SECTION 27156 OF THE VEHICLE CODE IN ACCORDANCE WITH SECTION 2222, TITLE 13 OF THE CALIFORNIA ADMINISTRATIVE CODE

I. INTRODUCTION

The Holley Replacement Parts Division (Holley) of Colt Industries Operation Corporation, 11955 East Nine Mile Road, Warren, Michigan 48090, has requested an exemption from the prohibitions of Vehicle Code Section 27156 for their throttle body injection (TBI) system model 3739. The exemption is sought for the limited 1982 through 1985 General Motors (GM) Corporation vehicles originally equipped with TBI system:

Model-Years	Vehicle Makes	Engine Size
1982-1985	Chevrolet, Buick, Pontiac and Oldsmobile	2.5L
1983-1985	Chevrolet, Cadillac, and Oldsmobile	2.0L
1982-1985	Buick, Pontiac, and Oldsmobile	1.8L

Holley has submitted data from comparative cold-start CVS-75 emissions tests performed at their own test facility. Their tests were performed on a 50-state certified 1985 Oldsmobile Ciera with a 2.5 liter six-cylinder engine. Confirmatory tests were conducted on a California-certified 1985 Oldsmobile Firenza powered by a 2.0 liter engine at the Air Resources Board (ARB) Haagen-Smit Laboratory in El Monte, California.

II. CONCLUSION

Based on the comparative exhaust emission data submitted by Holley and the results of the confirmatory tests performed at the ARB test facility, the staff has concluded that Holley has demonstrated compliance with the requirements for the exemption as per ARB adopted "Criteria for Evaluation of Add-On Parts and Modified Parts".

III. RECOMMENDATIONS

The staff recommends that Holley be granted an exemption for their TBI system model 3739 as requested and that Executive Order D-115-2 be issued.

IV. HOLLEY TBI SYSTEM DESCRIPTION AND OPERATION

The Holley TBI system model 3739 is designed to be an economical bolt on replacement TBI system for limited 1982 through 1985 model-year GM vehicles originally equipped with TBI. Installation instructions and mounting hardware are packaged with the Holley TBI.

The Holley TBI system is an electronic injector fuel metering system similar to the OEM TBI. It is aided by the electronic control module (computer) to determine the correct amount of fuel to be injected. There are two major assemblies within the TBI: (1) a throttle body with a valve to control air flow; and (2) a fuel body assembly with an integral pressure regulator and fuel injector to supply the required fuel. An electronically operated idle air control device to control idle speed and a throttle position sensor to provide information regarding throttle valve position are part of the TBI system.

Filtered fuel is supplied by a tank mounted fuel pump to the TBI unit positioned on the engine intake manifold. As it enters the TBI unit, the fuel is channeled directly to the injector where it is either discharged into the throttle body or is directed through a pressure regulator and back to the vehicle fuel tank. The injector and the regulator are mounted in the fuel body casting positioned directly above the throttle body bore.

The fuel injector is a solenoid operated device controlled by the computer. The incoming fuel is directed to the lower end of the injector assembly which has a fine screen filter surrounding the injector inlet. The computer actuates the solenoid which lifts a normally closed ball valve off a seat. The fuel under pressure is injected in a conical spray pattern at the walls of the throttle body bore above the throttle valve.

The fuel pressure regulator is a diaphragm-operated relief valve with injector pressure on one side and air cleaner pressure on the other. The function of the regulator is to maintain a constant pressure drop across the injector throughout the operating load and speed range of the engine.

The throttle position sensor is attached to the side of the TBI unit and is mechanically actuated by the throttle shaft. It is a rotary potentiometer that provides a voltage which is a function of throttle angle and enables the computer to read throttle position and, therefore, can be used as part of the fuel, spark timing and idle speed control systems logic.

Also mounted on the throttle body portion of the TBI unit is a stepper motor for managing engine speeds in the idle range in response to coolant temperatures, driving modes, transmission gear and the many variable loads such as those exerted by air conditioning compressor and power steering pump. The stepper motor moves a tapered pintle in an orifice to vary the amount of air that bypasses the throttle valve. Its position under any given set of conditions is controlled by variable power pulses supplied by the computer.

In order to accomodate the three engine sizes (1.8L, 2.0L and 2.5L) for which exemption is requested, Holley has designed the TBI system with two different injectors. Shown in Table 1 of the Appendices are the recommended injector usage for the various engine displacements.

A schematic diagram of the Holley TBI showing fuel flow path, and an OEM injector are shown in the Appendices.

V. HOLLEY TBI SYSTEM EVALUATION

Evaluation of the Holley TBI system consisted of comparative exhaust emission tests, using the cold-start CVS-75 test procedures, as per adopted "Criteria for Evaluation of Add-On Parts and Modified Parts".

Comparative tests were performed by both Holley and ARB. Holley tests were performed on a 1985 Oldsmobile Ciera powered by a 2.5 liter engine at their own test facility. Confirmatory tests performed at the ARB were performed on a 1985 Oldsmobile Firenza pwered by a 2.0 liter engine.

A summary of the test results is shown in the Appendices.

VI. DISCUSSION

Holley's exhaust emission test data are summarized in Table 2 of the Appendices. The data indicate that the Holley TBI model 3739 when installed on a 2.5 liter engine and using an injector calibrated to flow 64 lbs./hr of fuel at 12 psi will not cause an adverse affect on the vehicle's exhaust emissions.

In addition to Holley's tests, the ARB performed confirmatory tests on a 2.0 liter engine. The results of the evaluation are summarized in Table 3 of the Appendices. Holley initially designed their TBI system for installation on a 2.0 liter engine using an injector calibrated to flow 64 lbs./hr of fuel. Results of this calibration (denoted with

superscript 1 on the table) resulted in a significant increase in carbon monoxide (CO) emissions. In order to rectify the problem, Holley redesigned the TBI system for leaner operation by installing an injector flowing 46 lbs./hr. This change in injector caused an increase in oxides of nitrogen (NOx) emissions as compared to the OEM TBI (denoted with superscript 2 on the table). A second go-around of tests using an injector calibrated for 52 lbs./hr of fuel also resulted in increased CO emissions (denoted with superscript 3 on the table). A third go-around of tests using an injector calibrated to flow 50 lbs./hr of fuel resulted in emission levels comparable to the OEM system (denoted with superscript 4 on the table).

The changes in injectors for the various fuel flow calibrations did not cause any driveability problems during the chassis dynamometer emission tests nor on the road tests.

APPENDICES

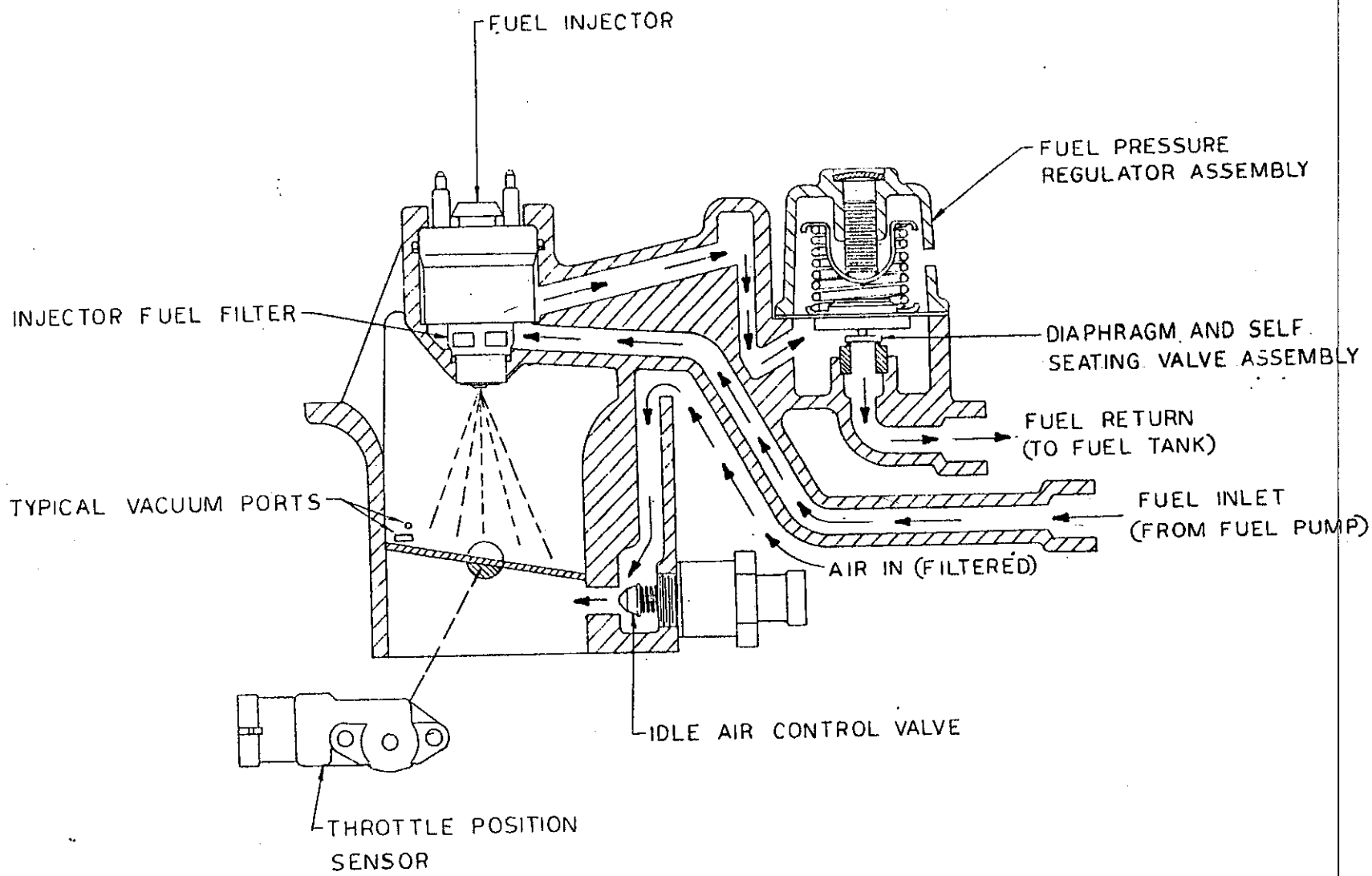

FUEL METERING SCHEMATIC
(HOLLEY THROTTLE BODY INJECTION)

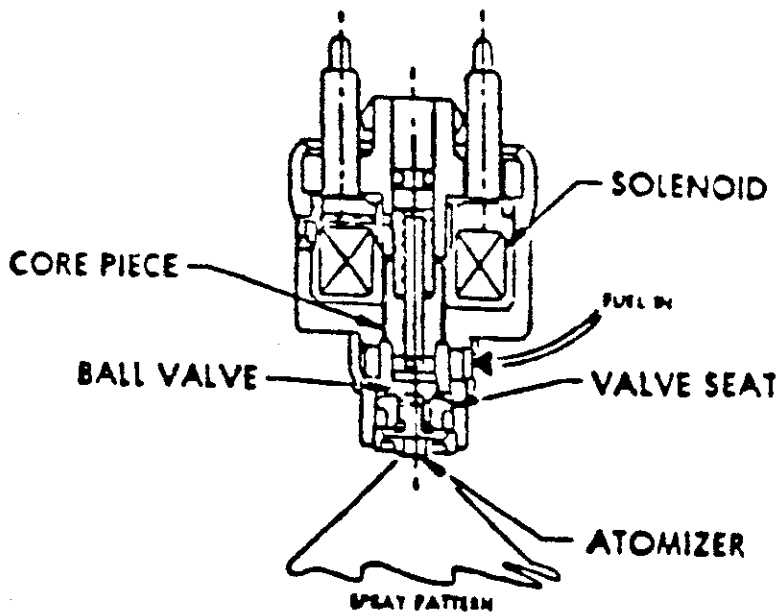
SOLENOID
CORE PIECE
FUEL IN
BALL VALVE
VALVE SEAT
ATOMIZER
SPRAY PATTERN

INJECTOR

Table 1

HOLLEY RECOMMENDED INJECTOR

Engine Size	Injector Size
1.8L	50 lbs./hr at 11 psi
2.0L	50 lbs./hr at 11 psi
2.5L	64 lbs./hr at 12 psi

Table 2

HOLLEY'S EMISSION TEST DATA
EVALUATION OF HOLLEY TBI MODEL 3739
1985 Oldsmobile Ciera, 2.5 Liter

	Exhaust Emissions (g/mi)			F.E.
	THC	CO	NOx	(mpg)
Baseline	0.13	1.9	0.3	23.44
Holley M-3739	0.04	2.0	0.2	23.73
Standard	0.41	7.0	0.7	--

Table 3

ARB'S EMISSION TEST DATA
EVALUATION OF HOLLEY TBI MODEL 3739
1985 Oldsmobile Firenza, 2.0 Liter

	Exhaust Emissions (g/mi)				F.E.
	THC	NMHC	CO	NOX	(mpg)
Baseline	0.17	0.13	3.4	0.43	23.41
Baseline	0.16	01.3	3.0	0.44	23.70
Average	0.17	0.13	3.2	0.44	23.56
Holley TBI(1)	0.19	0.15	5.0	0.45	23.30
Holley TBI(1)	0.18	0.14	5.4	0.41	23.24
Average(1)	0.19	0.15	5.2	0.43	23.27
Holley TBI(2)	0.29	--	2.0	0.59	23.5
Holley TBI(3)	0.18	--	5.5	0.34	23.8
Holley TBI(4)	0.19	--	2.6	0.46	23.9
Standard	--	0.39	7.0	0.7	--

NOTES (1): Holley injector calibrated for 64 lbs./hr. at 12 psi
(2): Holley injector calibrated for 46 lbs./hr. at 13.5 psi
(3): Holley injector calibrated for 52 lbs./hr. at 11 psi
(4): Holley injector calibrated for 50 lbs./hr. at 11 psi