State of California
AIR RESOURCES BOARD

EXECUTIVE ORDER D-148
Relating to Exemptions under Section 27156
of the Vehicle Code

R.N.D. ENTERPRISES
HEAT RISER ADAPTER

Pursuant to the authority vested in the Air Resources Board by Section 27156 of the Vehicle Code; and

Pursuant to the authority vested in the undersigned by Sections 39515 and 39516 of the Health and Safety Code and Executive Order G-45-5;

IT IS ORDERED AND RESOLVED: That the installation of the Heat Riser Adapter device manufactured by R.N.D. Enterprises has been found not to reduce the effectiveness of required motor vehicle pollution control devices and, therefore, is exempt from the prohibitions of Section 27156 of the Vehicle Code for all 1974 and older model-year vehicles equipped with a heated air intake system and retrofitted with exhaust headers.

This Executive Order is valid provided that installation instructions for this device will not recommend tuning the vehicle to specifications different from those submitted by the device manufacturer.

Changes made to the design or operating conditions of the device, as exempted by the Air Resources Board, that adversely affect the performance of a vehicle's pollution control system shall invalidate this Executive Order.

Marketing of this device using an identification other than that shown in this Executive Order or marketing of this device for an application other than those listed in this Executive Order shall be prohibited unless prior approval is obtained from the Air Resources Board. Exemption of a kit shall not be construed as an exemption to sell, offer for sale, or advertise any component of a kit as an individual device.

This Executive Order does not constitute any opinion as to the effect that the use of this device may have on any warranty either expressed or implied by the vehicle manufacturer.

THIS EXECUTIVE ORDER DOES NOT CONSTITUTE A CERTIFICATION, ACCREDITATION, APPROVAL, OR ANY OTHER TYPE OF ENDORSEMENT BY THE AIR RESOURCES BOARD OF ANY CLAIMS OF THE APPLICANT CONCERNING ANTI-POLLUTION BENEFITS OR ANY ALLEGED BENEFITS OF THE HEAT RISER ADAPTER DEVICE.

No claim of any kind, such as "Approved by Air Resources Board" may be made with respect to the action taken herein in any advertising or other oral or written communication.

Section 17500 of the Business and Professions Code makes untrue or misleading advertising unlawful, and Section 17534 makes violation punishable as a misdemeanor.

Section 43644 of the Health and Safety Code provides as follows:

> "43644. (a) No person shall install, sell, offer for sale, or advertise, or, except in an application to the state board for certification of a device, represent, any device as a motor vehicle pollution control device for use on any used motor vehicle unless that device has been certified by the state board. No person shall sell, offer for sale, advertise, or represent any motor vehicle pollution control device as a certified device which, in fact, is not a certified device. Any violation of this subdivision is a misdemeanor."

Any apparent violation of the conditions of this Executive Order will be submitted to the Attorney General of California for such action as he deems advisable.

Executed at El Monte, California, this 16th day of October, 1984.

Bob Gross for

K. D. Drachand, Chief
Mobile Source Division

State of California
AIR RESOURCES BOARD

EVALUATION OF R.N.D. ENTERPRISES' HEAT RISER ADAPTER DEVICE FOR EXEMPTION FROM THE PROHIBITIONS IN VEHICLE CODE SECTION 27156 IN ACCORDANCE WITH SECTION 2222, TITLE 13, OF THE CALIFORNIA ADMINISTRATIVE CODE

September 1984

Issue Date: September 1984

EVALUATION OF R.N.D. ENTERPRISES' HEAT RISER ADAPTER DEVICE FOR EXEMPTION FROM THE PROHIBITIONS IN VEHICLE CODE SECTION 27156 IN ACCORDANCE WITH SECTION 2222, TITLE 13, OF THE CALIFORNIA ADMINISTRATIVE CODE

by

Mobile Source Division

State of California
Air Resources Board
9528 Telstar Avenue
El Monte, California 91731

(This report has been reviewed by the staff of the California Air Resources Board and approved for publication. Approval does not signify that the contents necessarily reflect the view and policies of the Air Resources Board, nor does mention of trade names or commercial products constitute endorsement or recommendation for use.)

SUMMARY

R.N.D. Enterprises of 9007 De Soto Avenue, Canoga Park, California 91304, submitted an application for exemption from the prohibitions in Section 27156 of the California Vehicle Code for the company's "Heat Riser Adapter" device. The applicant has requested that exemption be granted for the installation of this device on all 1974 and older model-year vehicles originally equipped with a heated air intake system and retrofitted with exhaust headers. This device is intended to replace the function of the original equipment manufacturer's (OEM) hot air duct and stove when the OEM exhaust manifold is replaced by exhaust headers.

The staff evaluated the device and found that the "Heat Riser Adapter" device will not have a significant adverse effect on emissions from 1974 and older model-year vehicles retrofitted with exhaust headers.

The staff, therefore, recommended that the ARB issue Executive Order D-148, allowing the installation of the "Heat Riser Adapter" device on all 1974 and older model-year vehicles originally equipped with a heated air intake system retrofitted with exhaust headers.

TABLE OF CONTENTS

		Page Number
SUMMARY		i
CONTENTS		ii
I.	INTRODUCTION	1
II.	CONCLUSION	1
III.	RECOMMENDATION	2
IV.	DEVICE DESCRIPTION AND DESIGN CRITERIA	2
V.	DISCUSSION	3
APPENDICES		
A.	INSTALLATION INSTRUCTION	5
B.	HEAT RISER ADAPTER DETAILS	6
C.	CROSS-SECTIONAL AREA CALCULATIONS	8
D.	OEM SYSTEM FLOW AREA	10

State of California
AIR RESOURCES BOARD

EVALUATION OF R.N.D. ENTERPRISES' HEAT RISER ADAPTER DEVICE FOR EXEMPTION FROM THE PROHIBITIONS IN VEHICLE CODE SECTION 27156 IN ACCORDANCE WITH SECTION 2222, TITLE 13, OF THE CALIFORNIA ADMINISTRATIVE CODE

I. INTRODUCTION

R.N.D. Enterprises of 9007 De Soto Avenue, Canoga Park, California 91304, submitted an application for exemption from the prohibitions in Section 27156 of the California Vehicle Code for the company's "Heat Riser Adapter" device. Vehicle Code Section 27156 prohibits the installation of any device or mechanism which reduces the effectiveness of the required emission control systems on any California certified vehicle. This code also authorizes the Air Resources Board (ARB) to exempt a device from the prohibitions if it can be demonstrated that the device, upon installation on the engine, will not adversely affect the performance of existing emission control systems. The applicant has requested that exemption be granted for the installation of this device on all 1974 and older model-year vehicles originally equipped with a heated air intake system and retrofitted with exhaust headers. This device is intended to replace the function of the OEM hot air duct and stove when the OEM exhaust manifold is replaced by exhaust headers.

II. CONCLUSION

The staff evaluated the device and found that the "Heat Riser Adapter" device will not have a significant adverse effect on emissions from 1974 and older model-year vehicles originally equipped with a heated air intake system retrofitted with exhaust headers.

III. RECOMMENDATION

Based on engineering evaluation made on a sample device, sales brochure and technical data submitted by the applicant, the staff recommends that the ARB exempt the "Heat Riser Adapter" device from the prohibitions of Vehicle Code Section 27156 and that Executive Order D-148 be issued, allowing the installation of "Heat Riser Adapter" device on all 1974 and older model-year vehicles originally equipped with a heated air intake system and retrofitted with exhaust headers.

IV. SYSTEM DESCRIPTION AND DESIGN CRITERIA

The heat riser adapter kit device (Fig. in Appendix A) is composed of a heat riser adapter, a mounting clamp, and a 17-inch long aluminum flex tubing with a clamp on one end to hold it on to the heat riser adapter. Four different sizes of the tubing diameter are available: 1- 1/2in., 1-3/4in., 2in., and 2-1/4in. The appropriate size of heat riser adapter kit device for a particular engine is determined by the size of the air cleaner connection.

The design of heated air intake adapter includes consideration of air flow through the device and of heat transfer to the air. The air flow through the device is determined mainly by the cross-sectional area through which the air must pass. This flow area should approximate the flow area of the OEM hot air duct and stove.

Heat transfer to the air flowing through the device is a function of the temperature of the contact surfaces, the surface area, and the flow velocity. An adapter having approximately the same flow area as an OEM hot air duct and stove should have nearly the same flow velocity through it. This leaves the surface area and surface temperature as the primary variables influencing heat transfer to the intake air. Since the thin-walled steel header tubes run much hotter than cast iron exhaust manifolds, faster heat transfer is expected.

Apendix C 1 shows the minimum overlap (clamp over header-pipe) flow area as calculated from the formula in appendix C. To be added to this minimum flow area is a set of 3/4" diameter side vents in the device clamp which at the same time allows air to flow into the device. Appendix D shows typical minimum flow areas of some popular makes/models of vehicles.

V. DISCUSSION

The staff, based on engineering principles, evaluated the device and determined that the installation of a heat riser adapter device on a vehicle equipped with exhaust headers will not adversely affect the performance of the existing factory emission control system.

APPENDICES

RND ENTERPRISES

INSTALLATION INSTRUCTIONS:

(1) Measure the outside diameter of the heated air duct connection on the original air cleaner. Choose the kit which is closest to this dimension.

(2) Place cut-out end of adapter around an accessible header primary tube as close to the cylinder head as possible and secure with the hose clamp provided. (see figure)

(3) Route flexible ducting hose from adapter to the original heated air connection on the air cleaner and secure with the clamps provided.

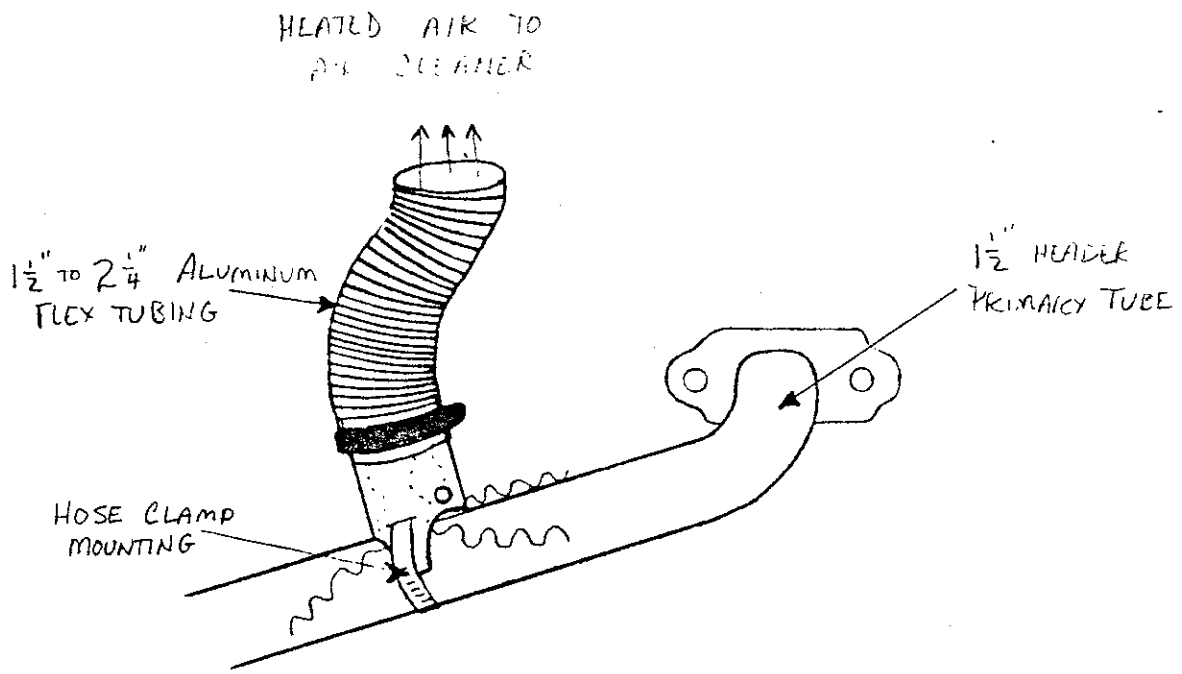

9007 DeSoto Ave. - Canoga Park - Calif. - 91304 - (818) 341-2112

RND ENTERPRISES

HEAT RISER ADAPTER- FRONT AND SIDE VIEWS

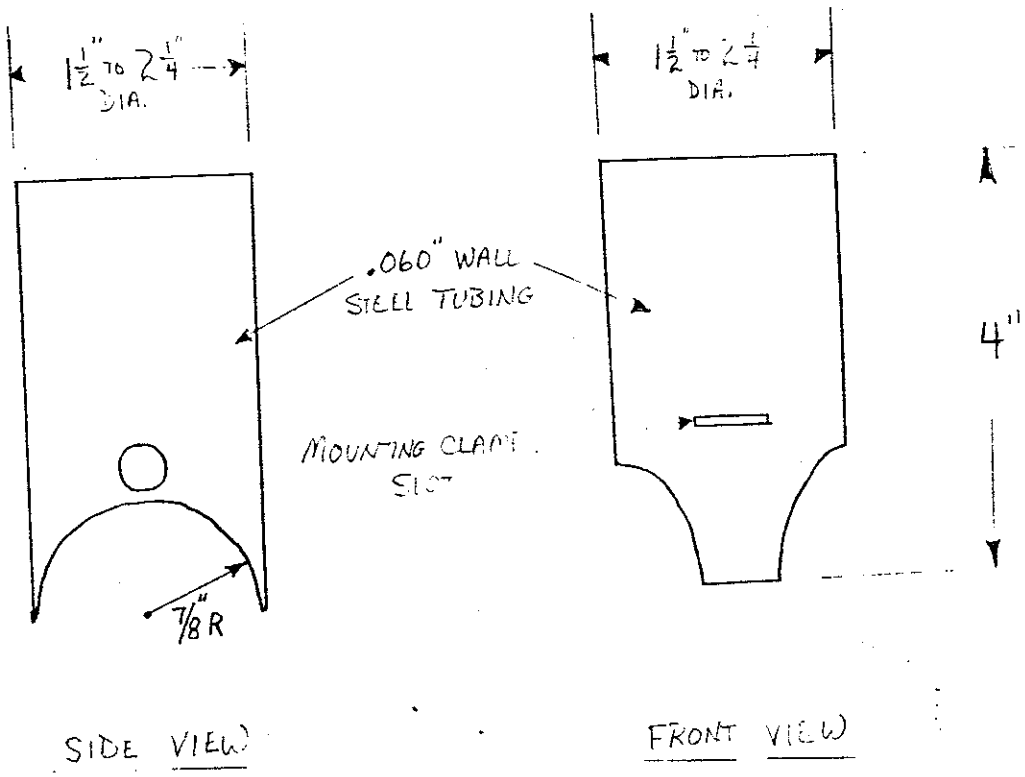

NOTE: KITS WILL INCLUDE A HEAT RISER ADAPTER, MOUNTING CLAMP, AND A LENGTH OF FLEX TUBING FOR CLAMPS.
4 SIZES WILL BE AVAILABLE 1½" 1¾" 2" 2¼".

9007 DeSoto Ave. – Canoga Park – Calif. – 91304 – (818) 341-2112

OVERLAP DETAILS

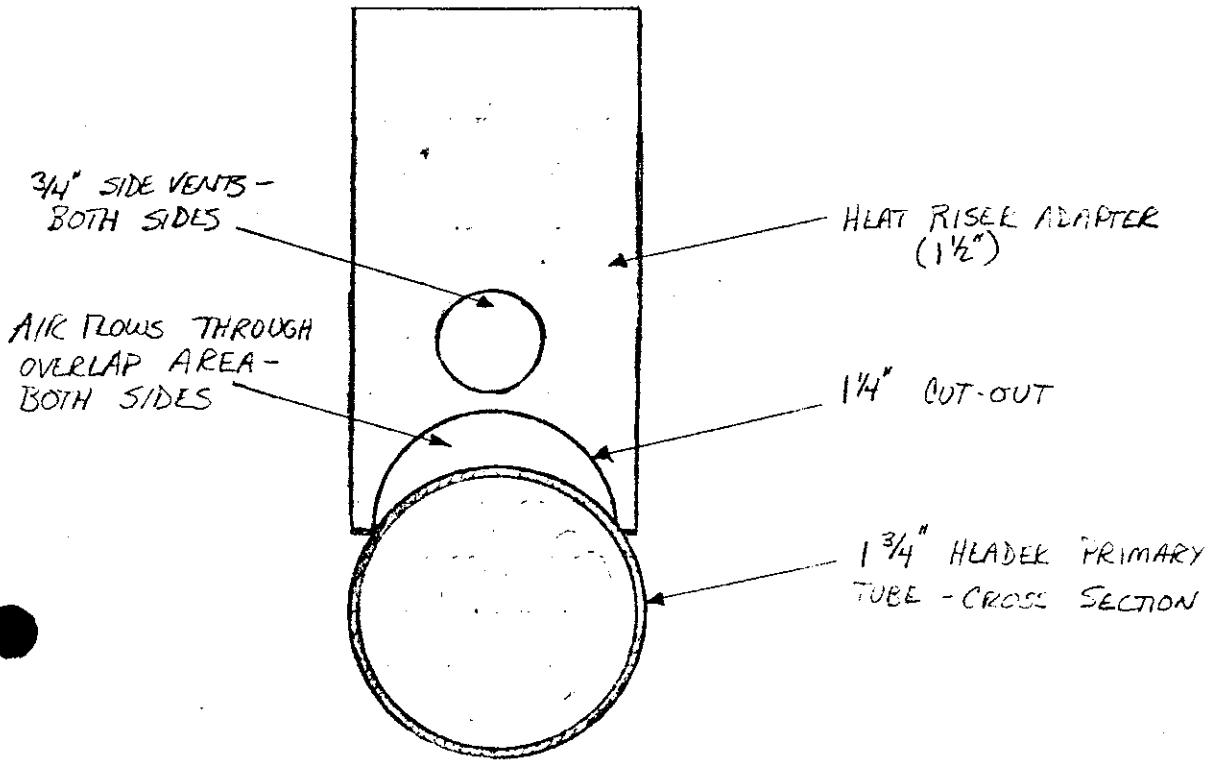

TO SCALE

RND EMP.

APPENDIX C

FLOW AREA OF LOWER OPENINGS

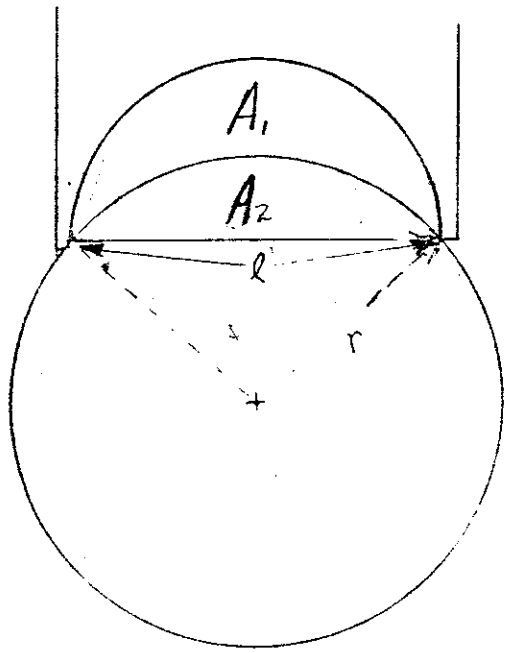

RECEIVED
AUG 2 8 [illegible]
AFTERMARKET PAR[illegible] AND
MODIFICATIONS EVALUA[illegible] SECTION
ENGINEERING BRANCH – VESS

TO FIND AREA A_1: (OVERLAP AREA – 2 DIMENSIONAL)

$$A_1 + A_2 = \frac{1/2\,(\pi \ell^2)}{4} = \frac{\pi \ell^2}{8}$$

$$A_2 = \frac{\pi r^2}{2} - \left[\ell/2 \sqrt{r^2 - (\ell/2)^2} + r^2 \sin^{-1}\left(\frac{\sqrt{r^2 - (\ell/2)^2}}{r}\right)\right]$$

$$\boxed{\therefore A_1 = \frac{\pi \ell^2}{8} - \frac{\pi r^2}{2} + \frac{\ell\sqrt{r^2 - (\ell/2)^2}}{2} + r^2 \sin^{-1}\left(\frac{\sqrt{r^2 - (\ell/2)^2}}{r}\right)}$$

WHERE r = HEADER TUBE RADIUS
ℓ = ADAPTER CUT-OUT — 1 1/4"

RND ENTERPRISES

The total flow area for the 2-dimensional case is the sum of the two overlap areas and the two 3/4" side vent areas. Results from calculations for various size header tubes are summarized in the following table for the 2-dimensional analysis. The true flow areas are actually somewhat greater.

HEADER TUBE SIZE *	MINIMUM FLOW AREA
1-1/2"	1.52 IN^2
1-5/8"	1.60 IN^2
1-3/4"	1.66 IN^2
1-7/8"	1.70 IN^2
2"	1.74 IN^2

These flow areas are in the range of the flow area of a 1-1/2" round duct. For comparison I have examined several OEM systems and have compiled a list of their approximate minimum flow areas. Please see the following page.

RND ENTERPRISES

OEM SYSTEM	MINIMUM FLOW AREA
Chevrolet 140 CID 4 cyl-1971-1974	1.3 IN^2
Chevrolet 327 CID 8 cyl-1967-1969	1.2 IN^2
Chevrolet 350 CID 8 cyl-1969-1974	.9 IN^2
Ford 2000cc 4 cyl-1971-1973	1.8 IN^2
Ford 351 CID 8 cyl-1969-1974	.7 IN^2
Oldsmobile 350 CID 8 cyl-1968-1974	3.1 IN^2
Buick 350 CID 8 cyl-1968-1974	1.4 IN^2
Dodge 225 CID 6 cyl-1967-1974	3.1 IN^2

RECEIVED
AUG 2 8 [illegible]
AFTERMARKET PARTS AND
MODIFICATIONS EVALUATION SECTION
ENGINEERING BRANCH - [illegible]

9007 DeSoto Ave. - Canoga Park - Calif. - 91304 - (818) 341-2112