State of California
AIR RESOURCES BOARD

EXECUTIVE ORDER D-165-2
Relating to Exemptions Under Section 27156
of the Vehicle Code

DOWNEY OFF ROAD MANUFACTURING
EFI AIR CLEANER ASSEMBLY

Pursuant to the authority vested in the Air Resources Board (ARB) by Section 27156 of the Vehicle Code; and

Pursuant to the authority vested in the undersigned by Sections 39515 and 39516 of the Health and Safety Code and Executive Order G-45-5;

IT IS ORDERED AND RESOLVED: That the installation of the EFI Air Cleaner Assembly, manufactured by Downey Off Road Manufacturing has been found not to reduce the effectiveness of required motor vehicle pollution control devices and, therefore, is exempt from the prohibitions of Section 27156 of the Vehicle Code for installation on the following vehicles equipped with Elecronic Fuel Injection:

PART NUMBER	APPLICATION
17110-R85	1985-87 Toyota Pickup/4 Runner with 2.4 liter, 4 cylinder engine.
17110-R88	1988-92 Toyota Pickup/4 Runner with 2.4 liter, 4 cylinder engine.
17110-RV6	1988-92 Toyota Pickup/4 Runner with 3.0 liter, V-6 engine.

Changes to the factory emission control systems include rotating the Air Flow Sensor 20° clockwise.

This Executive Order is valid provided that installation instructions for the EFI Air Cleaner Assembly will not recommend tuning the vehicle to specifications different from those submitted by the device manufacturer.

Changes made to the design or operating conditions of the device, as exempted by the ARB, that adversely affect the performance of a vehicle's pollution control system shall invalidate this Executive Order.

Marketing of this device using an identification other than that shown in this Executive Order or marketing of this device for an application other than those listed in this Executive Order shall be prohibited unless prior approval is obtained from the ARB.

This Executive Order does not constitute any opinion as to the effect the use of this device may have on any warranty either expressed or implied by the vehicle manufacturer.

This Executive Order is granted based on results from emissions tests conducted in accordance with Cold-Start CVS-75 Federal Test Procedure. However, the ARB finds that reasonable grounds exist to believe that use of the EFI Air Cleaner Assembly may adversely affects emissions of motor vehicles when operating under conditions outside the parameters of the previously prescribed test procedures. Accordingly, the ARB reserves the right to conduct additional emission tests, in the future, as such tests are developed, that will more adequately measure emissions from all cycle phases. If such test results demonstrate that the EFI Air Cleaner Assembly adversely affects emissions during off-cycle conditions (defined as those conditions which are beyond the parameters of the Cold-Start CVS-75 Federal Test Procedure), this Executive Order shall be effectively rescinded as of the date the test results are validated. Further, if such test results or other evidence provides the ARB with reason to suspect that the EFI Air Cleaner Assembly will affect the durability of the emission control system, Downey Off Road Manufacturing shall be required to submit durability data to show that the durability of the vehicle emission control system is not, in fact, affected and/or that the add-on or modified part demonstrates adequate durability.

In addition to the foregoing, the ARB reserves the right in the future to review this Executive Order and the exemption provided herein to assure that the exempted add-on or modified part continues to meet the standards and procedures of Title 13, California Code of Regulations, Section 2222, et seq.

THIS EXECUTIVE ORDER DOES NOT CONSTITUTE A CERTIFICATION, ACCREDITATION, APPROVAL, OR ANY OTHER TYPE OF ENDORSEMENT BY THE AIR RESOURCES BOARD OF ANY CLAIMS OF THE APPLICANT CONCERNING ANTI-POLLUTION BENEFITS OR ANY ALLEGED BENEFITS OF DOWNEY OFF ROAD MANUFACTURING'S EFI AIR CLEANER ASSEMBLY.

No claim of any kind, such as "Approved by the Air Resources Board" may be made with respect to the action taken herein in any advertising or other oral or written communication.

Section 17500 of the Business and Professions Code makes untrue or misleading advertising unlawful, and Section 17534 makes violation punishable as a misdemeanor.

Section 43644 of the Health and Safety Code provides as follows:

> "43644, (a) No person shall install, sell, offer for sale, or advertise, or, except in an application to the state board for certification of a device, represent, any device as a motor vehicle pollution control device for use on any used motor vehicle unless that device has been certified by the state board. No person shall sell, offer for sale, advertise, or represent any motor vehicle pollution control device as a certified device which, in fact, is not a certified device. Any violation of this subdivision is a misdemeanor."

Any apparent violation of the conditions of this Executive Order may result in its rescission or submission to the Attorney General of California for such action as he deems advisable.

The Bureau of Automotive Repair will be notified by copy of this order.

Executed at El Monte, California, this 18th day of December, 1992.

Norman Kaufman for
R. B. Summerfield
Assistant Division Chief
Mobile Source Division

DOWNEY INSTALLATION INSTRUCTIONS
EFI AIR CLEANER, 17110-R85 & R88

1. Remove all hose clamps from both ends of the top plastic air duct.

2. Remove air duct and hoses from vehicle, remove hoses from plastic air duct.

3. Transfer hoses onto new chrome duct.

4. Remove radiator reservoir bottle to allow clearance for air filter housing removal.

5. Unplug the air flow meter wiring harness from the air flow meter on top of the air filter housing.

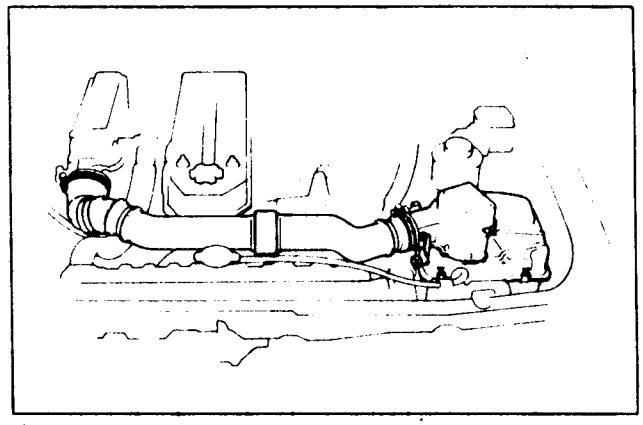

6. Remove the small plastic air duct that routes between the grille panel and air filter housing.

7. Remove the three mounting bolts and remove the air filter housing from the vehicle.

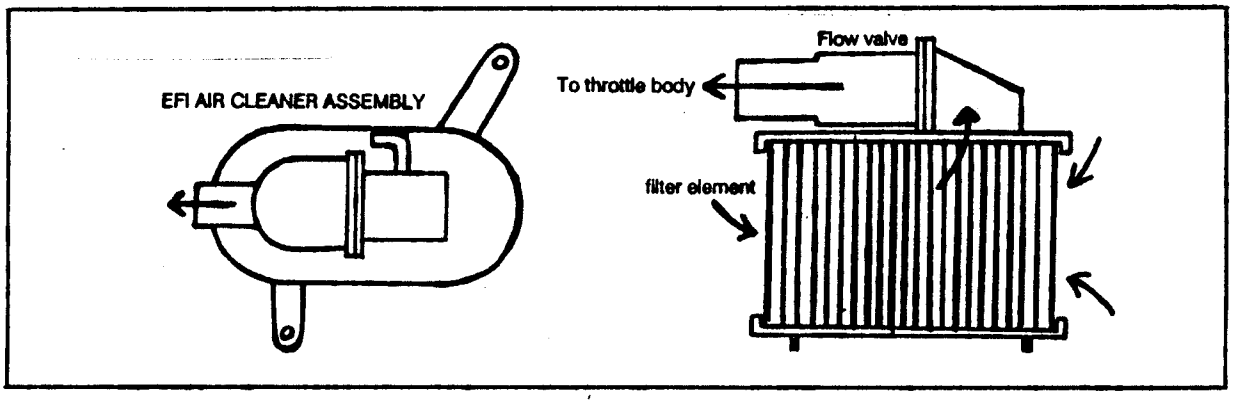

8. *1988 and newer only* - Drill a 13/16" hole in the rear vertical wall of the upper neck of the new aluminum top lid. Install plastic smog hose fitting supplied with EFI air cleaner assembly.

9. Unbolt the air flow meter from the stock air filter housing, transfer and tighten it onto the new aluminum top lid.

10. Assemble the EFI air cleaner assembly, filter, top and bottom lids, threaded rods and wing nuts. The threaded rods screw up into the top lid, the wing nuts will be below the bottom lid.

11. Mount the assembled EFI air cleaner into the stock location, align it with the stock bolt pattern on the inner fender apron, and install two of the original mounting bolts.

12. Attach the top air duct hoses to the air flow meter and throttle body. Install original clamps. Tighten.

13. Reinstall radiator reservoir bottle and tighten.

DOWNEY OFF ROAD MFG., 10001 S. Pioneer Blvd., Santa Fe Springs, CA. 90670, Phone 213-949-9494, FAX 213-949-5718

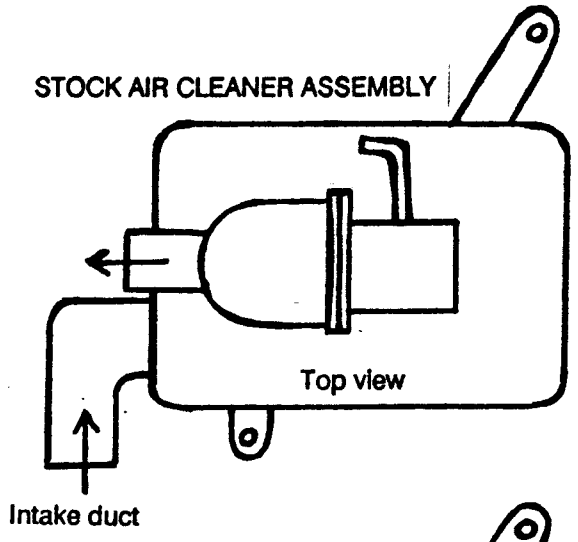
STOCK AIR CLEANER ASSEMBLY
Top view
Intake duct

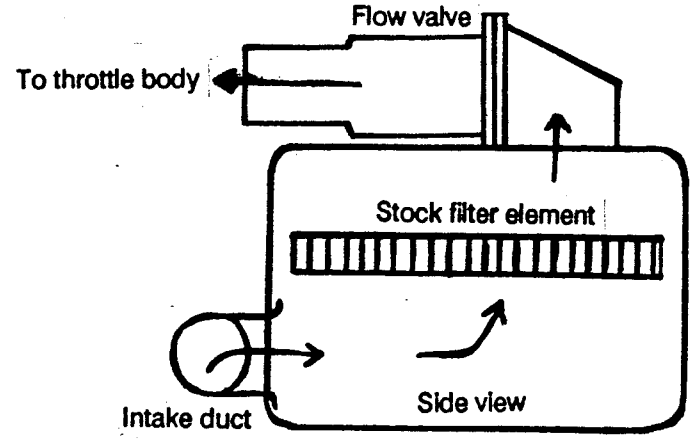
Flow valve
To throttle body
Stock filter element
Intake duct
Side view

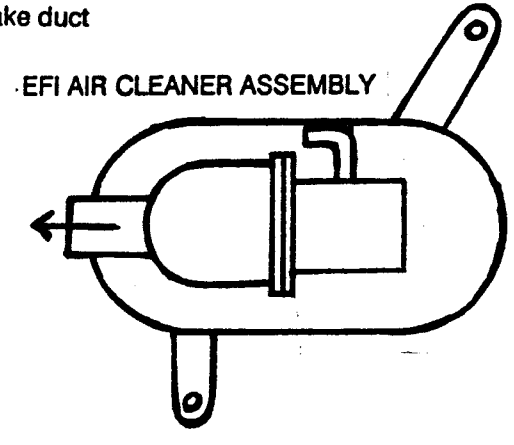
EFI AIR CLEANER ASSEMBLY

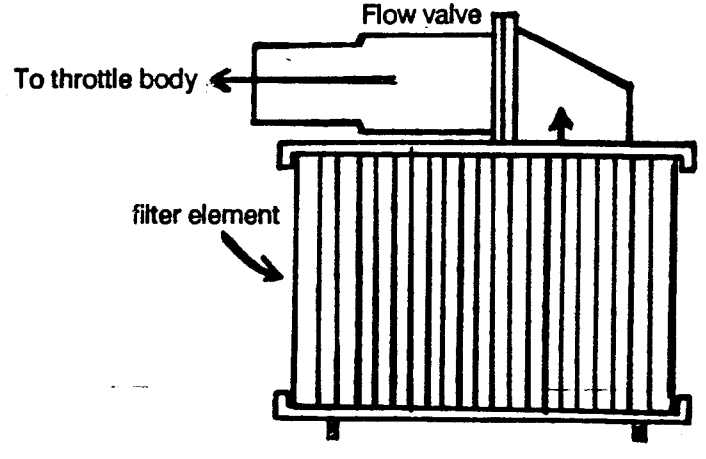
Flow valve
To throttle body
filter element