File Form

State of California
AIR RESOURCES BOARD

EXECUTIVE ORDER D-176
Relating to Exemptions under Section 27156
of the Vehicle Code

DINAN ENGINEERING INC.
TURBOCHARGER/INTERCOOLER KIT NO. 35-567-9

Pursuant to the authority vested in the Air Resources Board by Section 27156 of the Vehicle Code; and

Pursuant to the authority vested in the undersigned by Sections 39515 and 39516 of the Health and Safety Code and Executive Order G-45-5;

IT IS ORDERED AND RESOLVED: That the installation of the Turbocharger/ Intercooler Kit No. 35-567-9 manufactured by Dinan Engineering Inc. has been found not to reduce the effectiveness of required motor vehicle pollution control devices and, therefore, is exempt from the prohibitions of Section 27156 of the Vehicle Code for 1985-1987 model-year BMW 535i, 635i, 735i and 1988 model-year 535i models.

This exemption shall not apply to any device, apparatus, or mechanism advertised, offered for sale or sold with, or installed on, a motor vehicle prior to or concurrent with transfer to an ultimate purchaser.

This Executive Order is valid provided that installation instructions for this device will not recommend tuning the vehicle to specifications different from those submitted by the device manufacturer.

Changes made to the design or operating conditions of the device, as exempted by the Air Resources Board, that adversely affect the performance of a vehicle's pollution control system shall invalidate this Executive Order.

Marketing of this device using an identification other than that shown in this Executive Order or marketing of this device for an application other than those listed in this Executive Order shall be prohibited unless prior approval is obtained from the Air Resources Board. Exemption of a kit shall not be construed as an exemption to sell, offer for sale, or advertise any component of a kit as an individual device.

This Executive Order does not constitute any opinion as to the effect that the use of this device may have on any warranty either expressed or implied by the vehicle manufacturer.

THIS EXECUTIVE ORDER DOES NOT CONSTITUTE A CERTIFICATION, ACCREDITATION, APPROVAL, OR ANY OTHER TYPE OF ENDORSEMENT BY THE AIR RESOURCES BOARD OF ANY CLAIMS OF THE APPLICANT CONCERNING ANTI-POLLUTION BENEFITS OR ANY ALLEGED BENEFITS OF THE DINAN ENGINEERING INC.'S TURBOCHARGER/INTERCOOLER KIT NO. 35-567-9.

No claim of any kind, such as "Approved by Air Resources Board" may be made with respect to the action taken herein in any advertising or other oral or written communication.

Section 17500 of the Business and Professions Code makes untrue or misleading advertising unlawful, and Section 17534 makes violation punishable as a misdemeanor.

Section 43644 of the Health and Safety Code provides as follows:

> "43644. (a) No person shall install, sell, offer for sale, or advertise, or, except in an application to the state board for certification of a device, represent, any device as a motor vehicle pollution control device for use on any used motor vehicle unless that device has been certified by the state board. No person shall sell, offer for sale, advertise, or represent any motor vehicle pollution control device as a certified device which, in fact, is not a certified device. Any violation of this subdivision is a misdemeanor."

Any apparent violation of the conditions of this Executive Order will be submitted to the Attorney General of California for such action as he deems advisable.

Executed at El Monte, California, this 6th day of January 1988.

K. D. Drachand, Chief
Mobile Source Division

State of California
AIR RESOURCES BOARD

EVALUATION OF DINAN ENGINEERING, INC.'S TURBOCHARGER/INTERCOOLER KIT NO. 35-567-9 FOR 1985-1987 MODEL-YEAR BMW 535i, 635i, 735i AND 1988 MODEL-YEAR 535i VEHICLES FROM PROHIBITIONS IN VEHICLE CODE SECTION 27156 IN ACCORDANCE WITH SECTION 2222, TITLE 13, OF THE CALIFORNIA ADMINISTRATIVE CODE

January 1988

Date of Issue: January 1988

Evaluation of Dinan Engineering, Inc.'s Turbocharger/Intercooler Kit No. 35-567-9 for 1985-1987 Model-Year BMW 535i, 635i, 735i and 1988 Model-Year 535i Vehicles from Prohibitions in Vehicle Code Section 27156 in Accordance with Section 2222, Title 13, of the California Administrative Code

by

Mobile Source Division

State of California
Air Resources Board
9528 Telstar Avenue
El Monte, CA 91731

(This report has been reviewed by the staff of the California Air Resources Board and approved for publication. Approval does not signify that the contents necessarily reflect the views and policies of the Air Resources Board, nor does mention of trade names or commercial products constitute endorsement or recommendation for use.)

SUMMARY

Dinan Engineering, Inc. (Dinan) has applied for an exemption from the prohibitions of Vehicle Code Section 27156 for their Turbocharger/Intercooler Kit No. 35-567-9 for installation on 1985-1987 model-year BMW 535i, 635i, 735i and 1988 model-year 535i vehicles.

Dinan has submitted a completed application and all the required information as well as comparative exhaust emissions test data performed at Northern California Emissions Laboratory (Northern Lab) which shows that their kit does not have any adverse effects on the exhaust emissions. Testing performed at the Air Resources Board (ARB) confirmed the results of Northern Lab.

Based on the submitted information and the results of the comparative emissions tests performed at Northern Lab and the ARB the staff concludes that the installation of Dinan turbocharger/intercooler system will not adversely affect exhaust emissions on specified vehicles.

The staff recommends that Dinan be granted an exemption and that Executive Order D-176 be issued.

CONTENTS

		Page Number
SUMMARY		i
CONTENTS		ii
I.	INTRODUCTION	1
II.	CONCLUSION	1
III.	RECOMMENDATION	1
IV.	TURBOCHARGER KIT DESCRIPTION	1
V.	EMISSION TEST DATA	2
VI.	DISCUSSION	3
	APPENDIX A - Installation Instructions and the Parts List	4
	APPENDIX B - Identification Label	31

EVALUATION OF DINAN ENGINEERING, INC.'S TURBOCHARGER/INTERCOOLER KIT NO. 35-567-9 FOR 1985-1987 MODEL-YEAR BMW 535i, 635i, 735i AND 1988 MODEL-YEAR 535i VEHICLES FROM PROHIBITIONS IN VEHICLE CODE SECTION 27156 IN ACCORDANCE WITH SECTION 2222, TITLE 13, OF THE CALIFORNIA ADMINISTRATIVE CODE

I. INTRODUCTION

Dinan Engineering, Inc. (Dinan) of 81 Pioneer Way, Mountain View, California 94041, has applied for an exemption from the prohibitions of Vehicle Code Section 27156 for their Turbocharger/Intercooler Kit No. 35-567-9 for installation on 1985-1987 model-year BMW 535i, 635i, 735i and 1988 model-year 535i vehicles.

Dinan has submitted a completed application and all the required information as well as comparative exhaust emissions test data performed at Northern California Emissions Laboratory (Northern Lab) on a 1985 model-year BMW 535i. Confirmatory tests were performed on the same vehicle at the ARB.

II. CONCLUSION

Based on the submitted information and the results from comparative exhaust emissions performed at Northern Lab and confirmatory testing conducted at the ARB, the staff concludes that Dinan's turbocharger/intercooler kit no. 35-567-9 will not adversely affect exhaust emissions on applicable vehicles.

III. RECOMMENDATION

The staff recommends that Dinan be granted an exemption from the prohibitions of Vehicle Code Section 27156 for their Turbocharger/Intercooler Kit No. 35-567-9 for installation on 1985-1987 model-year BMW 535i, 635i, 735i and 1988 model-year 535i vehicles. The staff also recommends that Executive Order D-176 be issued.

IV. TURBOCHARGER KIT DESCRIPTION

The purpose of the Dinan turbo system is to increase the power output of the engine by compressing the intake charge to pressures above that of the atmosphere and increasing the volumetric efficiency of the engine. Increased pressure allows a greater charge density to enter the combustion chamber providing more oxygen for combustion. Since the air flow increases extra fuel is needed to maintain proper air-fuel ratios. The Dinan turbo system incorporates a fuel management system which provides precise fuel flow at different RPMs and air flows.

The main components of the Dinan turbo system includes a turbocharger, an intercooler, exhaust manifold, a wastegate and a fuel injection computer. The turbine, driven by exhaust gases, is linked to the compressor. The turbocharger is either an Airesearch T04B71 or a Rotomaster 465210-0007 with area ratio (A/R) of 0.96. The intake air is routed to the compressor through the compressor inlet pipe. The air flow is measured by a sensor P/N 1 280 203 027 34 5679. The intake air is then compressed and routed to an air-to-air intercooler.

It is then routed to the intake plenum. Lubrication and cooling of the turbocharger bearings is provided by the engine oil. Lubricating oil from the turbocharger is returned to the oil pan.

A fuel injection computer, P/N 35-567-750, monitors boost pressure and RPM and controls the fuel injection duration. Maximum positive pressure (boost) is limited to 9.00 psig by a Rotomaster wastegate model No. 225-1128-05V. No other bypass valve or controls are used.

The oxygen sensor is moved from the catalytic converter to the exhaust manifold (hotter location). The OEM fuel pressure regulator is replaced by another regulator, P/N 0260 150 226-5, included in the turbo kit. The charcoal canister is relocated above battery. No OEM emission control components are disconnected when the turbo system is installed. Installation instructions, included in every kit, show the kit installer how to properly install the turbo system. Appendix A shows the installation instructions and the parts list. A prototype identification label is shown in Appendix B.

V. EMISSION TEST DATA

A 1985 California certified BMW 535i with a manual transmission was used for emissions testing. Dinan performed comparative emissions testing at Northern Lab. The test program consisted of one CVS-75 (cold start) test and one Highway Fuel Economy test on the test vehicle in the unmodified (baseline) configuration and the same tests were performed on the same vehicle with Dinan turbo system installed. The results of the comparative exhaust emissions tests performed at Northern Lab are shown in Table 1.

Table 1

CVS-75 TEST RESULTS
(Northern California Emissions Laboratory)

	HC	CO	NOx
Baseline	0.28	2.70	0.38
Turbocharged	0.21	2.01	0.07
% change	-25	-26	-82

HIGHWAY FUEL ECONOMY TEST RESULTS
(Northern California Emissions Laboratory)

	NOx	Hwy-FECON
Baseline	0.10	20.77
Turbocharged	0.001	20.05
% change	-99	-3

Confirmatory testing was performed at the ARB. The results are shown in Table 2.

Table 2

CVS-75 TEST RESULTS
(Haagen-Smit Laboratory)

	HC	CO	NOx
Baseline 1	0.67	2.86	0.68
Baseline 2	0.61	2.70	0.69
Average	0.64	2.78	0.69
Turbocharged 1	0.22	2.09	0.06
Turbocharged 2	0.17	1.68	0.08
Average	0.20	1.89	0.07
% change	-68	-32	-90

HIGHWAY FUEL ECONOMY TEST RESULTS
(Haagen-Smit Laboratory)

	NOx	Hwy-FECON
Baseline 1	0.35	25.7
Baseline 2	0.26	26.6
Average	0.31	26.15
Turbocharged 1	0.01	26.4
Turbocharged 2	0.01	27.2
Average	0.01	26.8
% change	-96	+2

VI. DISCUSSION

The CVS-75 emissions test results at Northern Lab and confirmatory testing at the ARB indicate that Dinan turbo system reduces HC, CO and NOx emissions. This demonstrates that the installation of Dinan turbo system on specified vehicles will not adversely affect the exhaust emissions. Also, the Highway Fuel Economy test results indicate that the addition of Dinan turbo system does not have any adverse effects on NOx emissions.

Dinan submitted all the required information and fulfilled the requirement for an exemption. The test results confirm that Dinan turbo system meets the requirements for an exemption.

1985-> 535i

INTRODUCTION

Thank you for purchasing a Dinan Engineering turbo. We think it is the best performing, most trouble free turbo system on the market today. Please read the enclosed instructions thoroughly to familiarize yourself with the system hardware and recommended installation procedure. Work with precision and care for best end results.

Dinan Engineering has completed the necessary engineering to provide reliability and lasting endurance. This is done by providing the proper air/fuel ratio throughout the power range, also by reliably controlling boost pressure. The installation and recommended tuning of the turbo system is covered by instructions. Dinan Engineering has no effective way of insuring that the instrucions are followed; however we can assure ease of installation and tuning if the instructions are followed precisely. If it is determined that the instructions are not clear, please call us for clarification at (415) 962-9417.

Certain responsibilities must be exercised by any driver of a turbocharged car. It is important to understand that detonation is a sure way to damage any turbocharged engine. If repeated detonation is allowed, motor failure is imminent. Detonation can readily be heard. You need only to reduce speed to avoid damage.

The sound of detonation can be described as a loud tinny, metalic sound eminating from engine under load and boost conditions. Technically, detonation is a spontaneous combustion of end gases prior to flame front caused by spark from spark plug. Detonation is accompanied by pressure and temperatures that reach magnitudes of seven to ten times as great as those reached in normal combustion. It is easy to see how damaging detonation can be.

The actual noise heard when detonation occurs is the explosion's shock wave bouncing around the cylinder. We have taken every reasonable precaution to insure that your car will not have detonation problems. However, a failed component, a misadjustment or low octane fuel can lead to detonation.

If detonation is <u>ever</u> experienced, find and correct the problem at the earliest opportunity before resuming operation under boost.

INSTRUCTIONS - 535i

easy installation, all of the intake plumbing connections and all of the haust plumbing connections have been numbered. Just match the numbers together.

1. Disconnect negative battery cable.

2. Remove air box/air flow meter assembly along with black rubber air boot and vacuum control valve for charcoal canister hose. Remove right headlight access cover and flexible plastic breather hose.

3. Remove washer resevoir, charcoal canister and disconnect hose that runs between canister and fuel tank vent pipe. NOTE: New piece of 7.5mm hose 72" long will attach to this pipe. Remove ignition coil.

4. Remove idle control valve bracket from idle control valve. Locate the #12 hose clamp from kit and clamp them onto the idle control valve to manifold hose at idle control valve to prevent hose from popping off under boost.

5. Remove right front grill and headlight assembly. Slowly drain freon from air conditioning (AC) lines. When pressure is relieved, remove the two AC pipes that connect to the receiver drier from car. Remove receiver drier. Remove large hose that runs from AC pipe going through firewall to top front of AC compressor.

6. For easier access unbolt spark plug wire assembly from valve cover and swing r to left side of engine.

Raise car and remove both front sway bar and lower chassis brace tube which is next to sway bar.

8. Disconnect oxygen sensor from catalyst. Remove complete exhaust system from car. Remove both the small heatshield that sits atop the right side steering idler arm and the heatshield that connects to the inner pick-up point of the right rear lower suspension rod on front right wheel. Save all exhaust hangers for re-installation.

9. Remove exhaust manifolds. Remove the twelve 8mm studs from the head if they are not the shouldered type and replace with the twelve 8mm shouldered studs from the kit. The threaded holes must be cleaned out with 1.25mm tap to allow new studs to be installed to proper depth which is approximately half of stud shoulder submerged in head. Install studs using two nuts jammed together on longer portion of stud. Put a drop of red Loctite on threads to help prevent studs backing out. The non-shouldered studs from the factory will often come out of head causing noisy exhaust leaks, oil leaks and engine fires.

10. Using Figure 1 locate sheet metal lip on right frame rail that starts from firewall and goes to strut tower support. This lip must be bent away from engine then bent down flush with top of frame rail. This is to gain clearance for wastegate dump pipe.

. Using Figure 1 locate the thin sheet metal box section that is welded to e top of right front frame rail. Remove ground strap from captive nut on box ction. Cut out the section as shown in the drawing. The easiest tool for this type of cutting is a 3" Fiberglas cutting disc held in a handheld rotary die grinder motor. Smooth rough edges with file and cover all bare metal with

touch-up paint.

Use Figure 4 to see where ABS hydraulic unit is to be relocated for making ace for intercooler. It is important that all brake lines be connected to eir original location on ABS unit, to prevent any type of brake failure. Each brake line fitting nut can be marked with slash marks on top of nut and on metal next to corresponding hole for maintaining exact re-installation placement. Mark the nuts with a sharp scribe as shown in Figure 4 while marking ABS unit. Now remove all brake lines and clean up any brake fluid from paint work. Brake fluid will damage paint. Remove the two ground wires from ABS unit and unbolt ABS unit.

13. Using Figure 1, locate 10-1/2" x 3-1/2" rectangle that must be cut out for intercooler placement. Mark with scribe, then cut out with Fiberglas cutting disc. Smooth rough edges with a file and cover bare metal with touch-up paint.

14. It is very important that intercooler receives as much cooling air as possible to attain a proper level of efficiency. Using Figure 1, mark with scribe area of sheet metal behind right headlights that is to be cut out for air flow to cooler. Cut out and apply touch-up paint. Be very careful when cutting this sheet metal since there are some wires behind this panel that you don't want to cut through.

15. Using Figure 2, note placement of rectangular hole in sheet metal under bumper on right side of car. Cutting this hole is not mandatory, but if done it is nearly invisible to anybody who isn't squatted down looking for it. This hole will greatly increase air flow to intercooler core, creating more horse wer and lessening any chance of detonation. Failure to cut this hole will quire you to run at 1 lb lower boost.

16. Use Figure 3 to locate hole for oil return. Mark engine with center punch in spot shown on lower right side of engine block near the transmission. Drill a 1/8" pilot hole, then re-drill hole with 11/16" drill bit, but before hole is complete coat drill bit tip with grease to catch metal chips. Now tap hole with 1/2" pipe tap coated with grease. Remove and re-grease tap a few times during tapping process. Generally tapping is completed when tap is about 3/4" of the way in engine block. Now using flexable head magnet tool reach into oil pan through hole to pick up any stray metal chips. Repeat this procedure several time until magnet comes up clean.

17. Locate 45 5/8" hose to 1/2" pipe fitting and using a little pipethread sealant install in engine block pointing up and forward about 45 . Slide on 3" yellow oil return hose and two #10 hose clamps which will be tightened after turbocharger installation.

18. Remove oil filter canister and filter from oil filter housing. Remove oil filter housing from engine. Be careful not to damage gasket. Using Figure 5, mark and drill 21/64" hole in oil filter housing for turbo oiler line. Tap hole 1/8" pipe thread, wash out housing and install -4 to 1/8" pipe straight fitting with pipe sealant. Re-install oil filter housing. Install new oil filter and canister.

19. Use Figure 6 to mark and drill 3/8" hole in right side inner fender for per right intercooler mount. Remove plastic mud shield from right front wheel l above and forward of right front tire. Place intercooler through tangular hole and push stud of upper right cooler mount through hole you drilled in right inner fender. Finger tighten 8mm nut on stud from tire side of

wheel well. The intercooler elbow that is welded to cooler at 90 angle goes on top and points toward rear of car. With intercooler attached to inner fender at upper right mount and held vertically with even spacing in lower rectangular hole, mark with scribe for hole in lower right cooler mount. Remove cooler from car and drill 3/8" hole in spot where you scribed. Install rubber mount from kit on lower right cooler tab using 8mm nut and 8mm wave washer with mount on the outer side of tab. Now re-install intercooler using both right mounts and finger tighten nuts to hold in place. Locate upper left cooler bracket from kit and attach it to rubber mount on top left of cooler with 8mm nut and wave washer using Figure 4 for reference. Mark for two bracket holes in sheet metal above right headlights. Remove intercooler from car and drill the two holes you marked with a 9/32" drill bit.

20. Using Figure 4 remount ABS unit on front top portion of right wheel well. Use rubber mount from kit for upper right bracket. Screw rubber mount with 6mm studs directly into ABS unit where original mount was unscrewed. Lower and rear ABS brackets both attach to factory rubber mounts. Mark and drill 9/32" holes to hold ABS unit in a position where all brake lines will reach and ABS unit is about 1/2" to 3/4" behind intercooler. Attach brackets with 6mm x 16mm bolts, flat washers and 6mm nylock nuts.

21. Attach all brake lines in respective holes, routing lines between upper and lower factory air box brackets keeping them neatly aligned and not criss-crossing them. Some bending of lines is necessary but avoid making any tight bends that will kink the lines and cause brake failure. It is important that brake lines do not rub on other parts, so route them accordingly.

22. Notice the single ground wire that is attached to ABS unit. This wire must be affixed along with the ground wire from ABS wiring harness to the 6mm stud on the factory ignition coil mounting bracket using 6mm nylock nut and flat washer.

23. Bleed brake lines using pressure bleeder if available. First bleed right rear, then left rear, then right front, then left front until all traces of air bubbles are gone.

24. Permanently mount intercooler using 8mm nuts and wave washers for rubber mounts and two 6mm x 16mm bolts, two 6mm nylock nuts and four flat washers for upper left cooler bracket. Re-attach plastic mudshield to inner fender well.

25. Remove one rubber air box mount nearest to the wheel well from upper air box bracket.

26. Mount wastegate to exhaust manifold using two 10mm copper lock nuts and two knurled lock washers. Wastegate is mounted with pressure release valve pointing down and mating to exhaust manifold face. Exhaust outlet flange points away from engine.

27. Install exhaust manifold to engine using new exhaust gaskets. Mounting is done with twelve 8mm copper lock nuts and twelve 8mm knurled washers. Tighten all these nuts very snug as they are subjected to high temperatures and vibration.

28. Connect and tighten 44" -4 turbo oiler hose to turbocharger. A small amount of anti-sieze compound on fitting threads and mating surface will prevent thread galling and help produce a tight seal.

29. Support engine with jack or jack stand. Remove right front motor mount to

make room for turbo.

Install turbocharger to exhaust manifold using four 10mm copper lock nuts d four 10mm knurled washers. Yellow oil return hose can be slipped onto turbocharger oil return fitting before aligning turbo on studs. Tighten the two #10 hose clamps. Turbo housings have been preset. However, check to make sure there is 1/4" clearance between turbo discharge elbow and block. Re-install motor mount.

31. Aim turbo oiler line straight up and over valve cover through space between #4 and #5 intake manifold flanges then directly to fitting on oil filter housing. Apply anti-seize then tighten.

32. Locate exhaust downpipe that mounts to outlet flange of turbo. Before mounting downpipe to turbo hold downpipe in place to outlet flange with center of downpipe 8" from center line of transmission. If there are any places where downpipe is closer than 1/2" to heat insulation, insulation must be moved to produce a minimum gap of 1/2". A large hammer is suggested for this operation. This step is very important to prevent any exhaust vibration noise and to assure long life of exhaust downpipe.

33. Locate wastegate dump pipe and 4" piece of flexible steel tubing. Slide flex tubing over dump pipe about 3/4".

34. Wastegate dump pipe is mounted to wategate using two 3/8" x 1-1/4" bolts, two copper lock nuts and two knurled washers. Install dump pipe to wastegate with flexpipe routed through space between suspension pick-up point bracket and firewall heat insulation without tightening the bolts all the way so that dump pipe position can be adjusted slightly. If there is insufficient space for dump pipe between suspension pick-up point bracket and heat insulation, the space should be increased using large pry bar and hammer on heat shielding. Minimum clearance at this point should be 1/4".

35. Slide one of the #20 hose clamps on to flex pipe and tighten onto dump pipe. Slide the other #20 hose clamp onto flex pipe for use later.

36. Put exhaust downpipe into position while lining up flex pipe to inlet pipe on downpipe, and with two flat sections of downpipe flange lined up with flat sections on turbo. Install the three 10mm x 30mm bolts through downpipe flange into turbo flange in the two top holes and the bottom right hole. The 10mm x 35mm long bolt holds the turbo to engine block support bracket as well as the downpipe flange. Connect other end of turbo support bracket to threaded hole in block, next to transmission bell housing using one 10mm x 20mm bolt and 10mm wave washer.

37. Now with center of downpipe outlet exactly 8" from center line of transmission, tighten the four 10mm copper lock nuts to the four 10mm bolts that hold downpipe to turbo. Tighten the 10mm x 20mm bolt on the turbo support bracket. Tighten the #20 hose clamp on flex pipe at downpipe wastegate inlet pipe.

38. Center wastegate dump pipe between suspension pick-up point bracket and heat insulation. Now tighten dump pipe to wastegate.

Install aluminum heatshield to exhaust manifold using four 6mm x 10mm copper bolts with anti-seize compound on threads.

40. Oxygen sensor that was located in catalyst must be relocated to top of turbo exhaust manifold. Remove oxygen sensor and wires from thin sheet metal protector on bottom of car. Route up and over back of engine along main wiring harness next to right wheel well and straight across to large threaded hole in manifold. Install oxygen sensor using anti-seize on threads.

41. Install exhaust system as shown in Figure 7. Exhaust system should be installed on car using original hangers and adjusted for proper fit and clearance. Two 3-hole flanges are provided so exhaust can be removed at later date to facilitate repairs. Use pipe provided between 3-hole flange and catalizer. See Figure 7. Install transmission to exhaust hanger. See Figure 7A.

42. Find loose end of engine ground strap that was removed from frame rail box section. This must be bolted to bottom of frame rail with 8mm x 16mm bolt, two flat washers and 8mm nylock nut. Looking at right frame rail from under car, notice the rectangular piece of sheet metal with oval hole welded to bottom of frame rail about 2" in front of front subframe. Measure 5/16" to the rear of rectangular piece and drill a 3/8" hole in bottom of frame rail on center of frame rail. Scrape all paint from around hole for a good metal to metal contact with ground strap bolt and washer. Attach ground strap to frame rail inserting washer and nut through oval hole. Tighten bolt firmly for good contact, reaching through oval hole with standard type box end 13mm wrench.

43. Replace stock fuel pressure regulator with regulator from kit. Again lubricant on rubber o-ring is strongly suggested.

44. Using new charcoal canister bracket and four 8mm head sheet screws, re-locate charcoal canister above battery on top of left wheel well with hose fittings pointing toward engine. Mark for four 1/8" holes, drill, mount bracket, then install canister using 6mm x 20mm bolt and wave washer.

45. Connect 72" piece of fuel hose to fuel tank vent pipe using #4 hose clamp and run it through hole in strut tower support, along wheel well, between AC dryer and ABS until 1" away from the intercooler, then straight across to space under spark plug wires and between valve cover and distributor cap. Hose shoul then be routed under water thermostat housing to middle fitting on canister.

46. The 22" piece of fuel hose is routed between outer hose fitting on caniste up through space between second and third intake runners. This hose will connect to charcoal canister control valve after installing PCV hose.

47. Locate windshield washer reservoir with mounting bracket. Mount this bracket to factory bracket located under engine coolant reservoir using two 10m x 20mm bolts and two 10mm wave washers.

48. Using the two 54" wires from kit and the four red wire connectors, lengthe the original washer pump plug wires. Cut wires about 2" from plug, strip ends and crimp on new wires. Route these wires next to charcoal canister hose to washer pump. Remember to connect brown to brown and purple to purple to maintain correct polarity.

49. Connect 44" long piece of clear washer hose between end of clear washer hose that was disconnected from original washer pump and discharge fitting on new washer pump. Use straight plastic hose connector to join two hoses together. Route washer hose next to washer wires.

50. Locate the blue Scotch type wire splicer and crimp onto the two wires that went to washer fluid reservoir float level sensor. This will turn off the washer fluid indicator light.

51. Re-attach spark plug wire assembly.

52. Mount ignition coil as shown in Figure 4. Coil should be mounted above right frame rail and close to radiator. Mark and drill 9/32" hole and attach coil to front sheet metal panel using 6mm x 16mm bolt, two 6mm flat washers and 6mm nylock nut. Connect primary and secondary wires.

53. Re-install headlight assembly.

54. Find the hose that connects to the rear fitting on the AC compressor and is attached to a tab on the compressor by a small AC hose clamp. Remove this clamp, bend down tab around back of compressor Loosen fitting on compressor and turn hose clockwise until it points straight back. Now tighten fitting. Find the 90 bend in the portion of this hose at the point where it becomes metal tubing, and bend it out towards engine about 40 . This will make space for lower intercooler pipe to come up through space between exhaust manifold and right fender well.

55. Re-install front sway bar and lower chassis tube brace.

56. Using 2-3/8" long rectangular steel pedestal mount bracket, install receiver drier in corner of sheet metal tray under factory air box brackets, referring to Figure 4 for approximate location. This pedestal mount bracket simply elevates the receiver drier and is attached to sheet metal tray using 8mm x 16mm bolt, two flat wahsers and one nylock nut. Drill 3/8" hole in sheet metal tray for mounting.

57. Connect 15" AC hose between lower fitting on receiver drier and fitting on condensor in front of car where short AC pipe was removed. Route this hose through space between left side of intercooler and ignition coil. Make sure small rubber o-rings are in place on all AC fittings before tightening. Replace right front grill.

58. Connect 28" AC line between small pipe going into interior of car and top fitting on receiver drier. This hose will make a tight u-turn at receiver drier, then run the hose down to the top of frame rail, back to the strut tower support and then up to the small AC line. Halfway to the strut tower support, clamp hose to the top of frame rail. Make sure hose is not rubbing on sharp edges.

59. Connect 26" AC hose between larger pipe going through firewall and AC hose fitting on front of AC compressor and rotate elbow point from compressor straight to the strut support brace, tighten fitting. The middle of this AC line should be attached to the top of AC hose that runs along the top of frame rail using a tie strap. Where hose touches wheel will, point it straight to the AC fitting from the firewall.

60. Locate short 14-1/2" straight pipe. This pipe is 2-1/4" OD chrome pipe that is connected between the lower intercooler to the turbo discharge. On the intercooler side of the pipe use a 2-1/4" bellow hose and two #32 hose clamps. On the turbo discharge side of the pipe use a 2-1/4" x 45 degree hose and two #32 hose clamps. After pipe and hoses are in place tighten all four clamps.

61. Locate the upper intercooler to throttle pipe. This pipe is the 2-1/4" chrome pipe with a 3/4" OD tube welded to pipe 3-1/4" from end. Using 2-1/4" yellow hose, 3" to 2-1/4" transition hose, three #32 hose clamps and one #46 hose clamp, connect this pipe between throttle housing and top elbow of intercooler. Now tighten all hose clamps for both pipes. Now get the long rubber snubber from kit. On the center of the 90 degree bend of pipe, mark on wheel well. Remove pipe, drill 1/4" hole, mount rubber snubber using 6mm nylock. Re-install pipe. This snubber is a rest for the pipe although pipe does not have to rest on snubber.

62. Locate 1-3/4" long piece of black 3/4" ID hose. Using this hose and two #12 clamps, connect idle control valve to tube on upper pipe.

63. Using Figure 8 and 8A, cut bottom off of lower air box half with Fiberglas cutting disc. Smooth edges with file and use black paint to touch-up if so desired.

64. Locate bracket for the bottom of the air box. Bolt bracket with snubber pointing down on air flow meter side of box. Use two 6mm bolts and nylock nuts to secure it. Use loctite for good measure. If bolt comes loose, it will get sucked into engine and destroy it!! See Figure 8A.

65. Using original 6mm nut and large flat washer, attach air box to air box bracket. Air box goes down between engine and AC dryer/ABS unit. Opening faces toward dryer and ABS unit, snubber rests on frame rail to support air box. See Figure 8A.

66. Install -4 to 1/8" pipe 90 degree fitting into hole in front side of wastegate using anti-seize on threads. Aim fitting straight down.

67. Install -4 to 1/8" straight fitting into turbo to discharge pipe using pipe thread sealant on threads.

68. Install 20" long -4 hose between the two -4 fittings applying a small amount of anti-seize compound on threads and sealing surfaces of fittings.

69. Locate large black electrical plug that was removed from air flow meter. Slide rubber boot a few inches back. These four wires must be lengthened 7" using wires and shrink tubing pieces from kit. Cut and solder wires one at a time to avoid crossing wires which will prevent engine from running and cause possible injection computer damage. Slide two pieces of shrink tubing on each wire before soldering. Cover solder joints with shrink tubing and use heat gun or cigarette lighter to shrink the tubing. Cover the wires with electrical tape, preferrably the cloth or friction type. Slide boot back on plug. See Figure 9.

70. Connect turbo air flow meter to air box with 2-3/4" to 3" hose, clamp with #44 and #48 hose clamps. Air flow meter positioning is as shown in engine photograph copy with unit sitting level. Reconnect electrical plug.

71. Remaining 2-1/2" chrome pipe connects between turbo inlet and AFM outlet. Use 2-1/2" to 2-3/4" hose between turbo inlet and 2-1/2" end of pipe, clamp with two #44 hose clamps. Use large black plastic elbow from kit to connect 2 3/4" end of pipe to AFM, clamp with clamps from factory original elbow. Keep clearance between pipe and all other objects. Clamp long AC hose to frame rail at this point re-adjusting pipe if necessary.

72. Connect new PCV hose assembly between valve cover breather pipe and breather pipe on air flow meter to turbo inlet pipe. The end of the PCV hose that has the "T" connector goes to valve cover breather. Use a #10 hose clamp for other end of hose. Locate the 2" long piece of PCV hose from the kit. This hose is used to connect charcoal canister control valve to the smaller tube on PCV "T". Use the two #5 hose clamps to secure this hose. Now connect the remaining charcoal canister hose to the middle tube on the charcoal canister control valve which should be pointed down. Re-connect vacuum hose to small tube on valve.

73. Reconnect negative ground cable.

74. Install Turbotronics box as shown in diagram. Turbotronics box may be adhered to bottom of fuel injection control unit in glove box using piece of Velcro supplied. Vacuum hose can be run through rubber plug for fuel injection wiring harness.

75. Start engine. Check for any fluid leaks or strange noises. Once engine is at operating temperature, disconnect oxygen sensor, set idle mixture CO to stock specifications .5% $\pm$ .2 CO. Reconnect oxygen sensor.

76. Evacuate and recharge AC system.

77. Change engine oil.

78. Boost must be set at 9 lbs PSI. On initial test drive go easy on the acceleration and listen closely for any unusual noises. To test for maximum boost, car should be in 4th gear at about 2200 rpm. Then fully depress accelerator pedal until rpm reaches about 3500. The point at which boost reached its highest level is the maximum boost. Maximum boost should occur between 3,000 and 3,500 rpms. If at any point during test boost exceeds the desired level, or if detonation occurs, immediately lift off accelerator pedal. This test should be done on a straight section of open road, free of other vehicles.

81. If boost is too high loosen 14mm jam nut on top of wastegate and using 3/16" allen wrench, turn adjusting screw counter clockwise. Then re-test until proper boost level is acquired, then tighten jam nut. To increase boost, turn screw clockwise.

IMPORTANT

1. Running boost too high may cause engine surging, loss of power and harmful engine detonation. Running boost at below 7lbs PSI will prevent Turbotronics box from turning on, resulting in poor performance.

2. If at any time detonation is heard, contact Dinan Engineering for technical assistance. Detonation can cause severe engine damage.

3. Run only top grade unleaded premium fuel in your Dinan Engineering turbo powered car. This is a must!

Maintenance

Every 2500 miles change the oil and filter in your engine.

2. Periodically check all bolts, hoses and clamps for tightness.

3. A turbo stresses the vehical more, so more service is required. It is commended that minor services be done at 5000 and major service be done at 0,000.

4. For any technical assistance call Dinan Engineering at (415) 962-9417 between 9:00am and 4:30pm, Pacific Coast time, Monday through Friday.

SPECIAL INSTRUCTIONS.....

As with all turbocharged engines, when shutting off the engine after any hard running (freeway driving or "on boost" performance, etc.) let the motor idle for one to three minutes before turning it off. This allows everything to cool down before the oil flow, which lubricates and cools the turbo, is shut off. Failure to do so will shorten the turbo life dramatically. Also do not boost engine until it is warm or you will dramatically shorten engine life. This is true of any engine but especially true with turbo cars.

Street turbos are designed to run in boost for only short bursts. If you are at a race track or on a very long section of road that enables you to run boost almost continuously, lift off occasionally for several miles allowing engine to dissipate heat. If you are planning to run car in this manor frequently, we recommend the following additional modifications to ensure long life; oil cooler and larger capacity radiator.

IMPORTANT: There is a $50.00 core charge on the air flow meter. This will be refunded when the core is returned to Dinan Engineering. No core refunds after days.

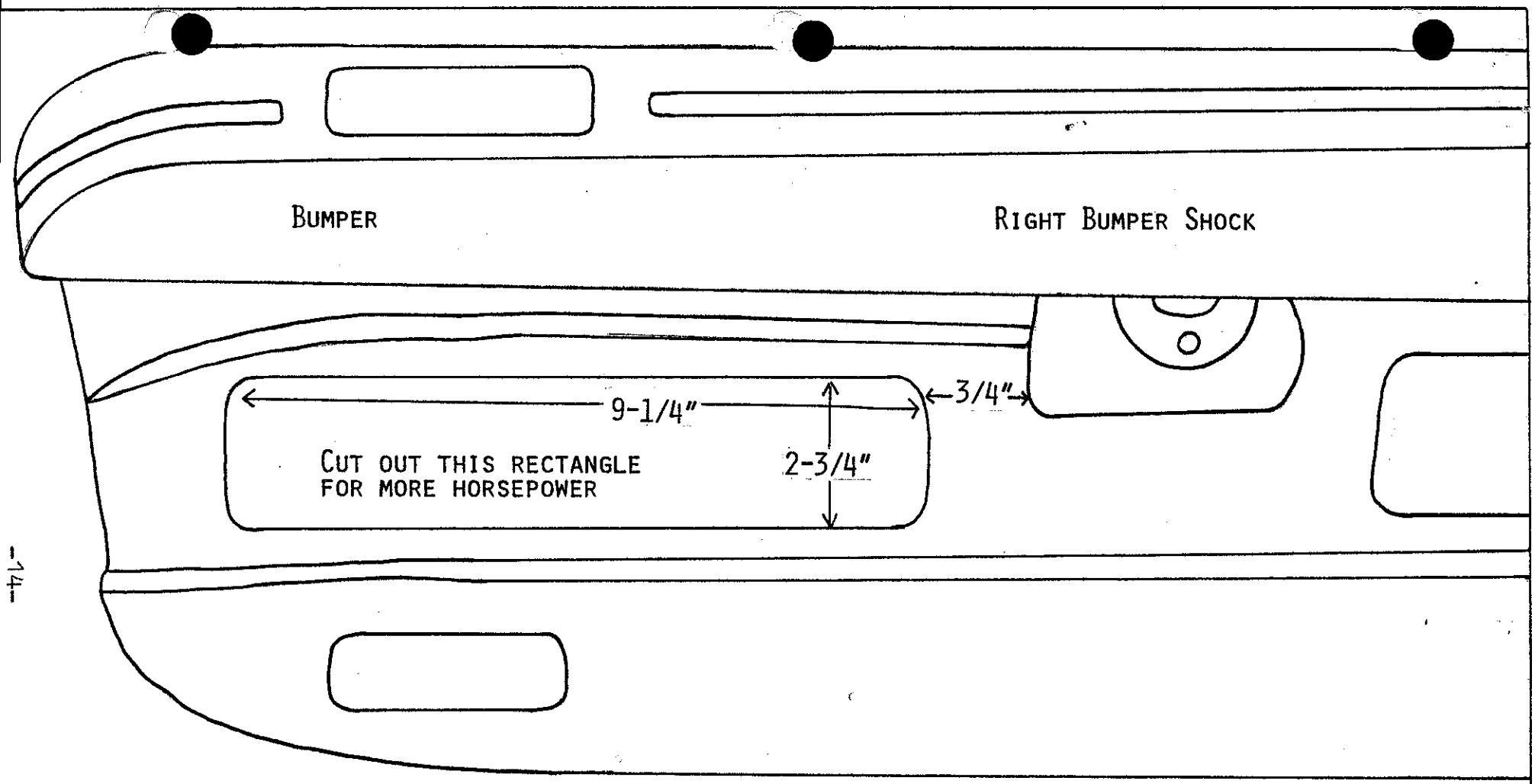

THIS CUTOUT WILL GREATLY INCREASE AIR FLOW TO INTERCOOLER, THUS INCREASING POWER, AND DECREASING CHANCE OF DETONATION. SHEET METAL SHOULD BE CUT WITH CIRCULAR FIBERGLAS CUTTING DISC AND THEN EDGES CLEANED UP WITH DIE-GRIND BIT. A LITTLE TOUCH-UP PAINT ON EDGES IS SUGGESTED. CUTTING THIS PIECE IS NOT MANDATORY.

FIGURE 2

FIGURE 1B

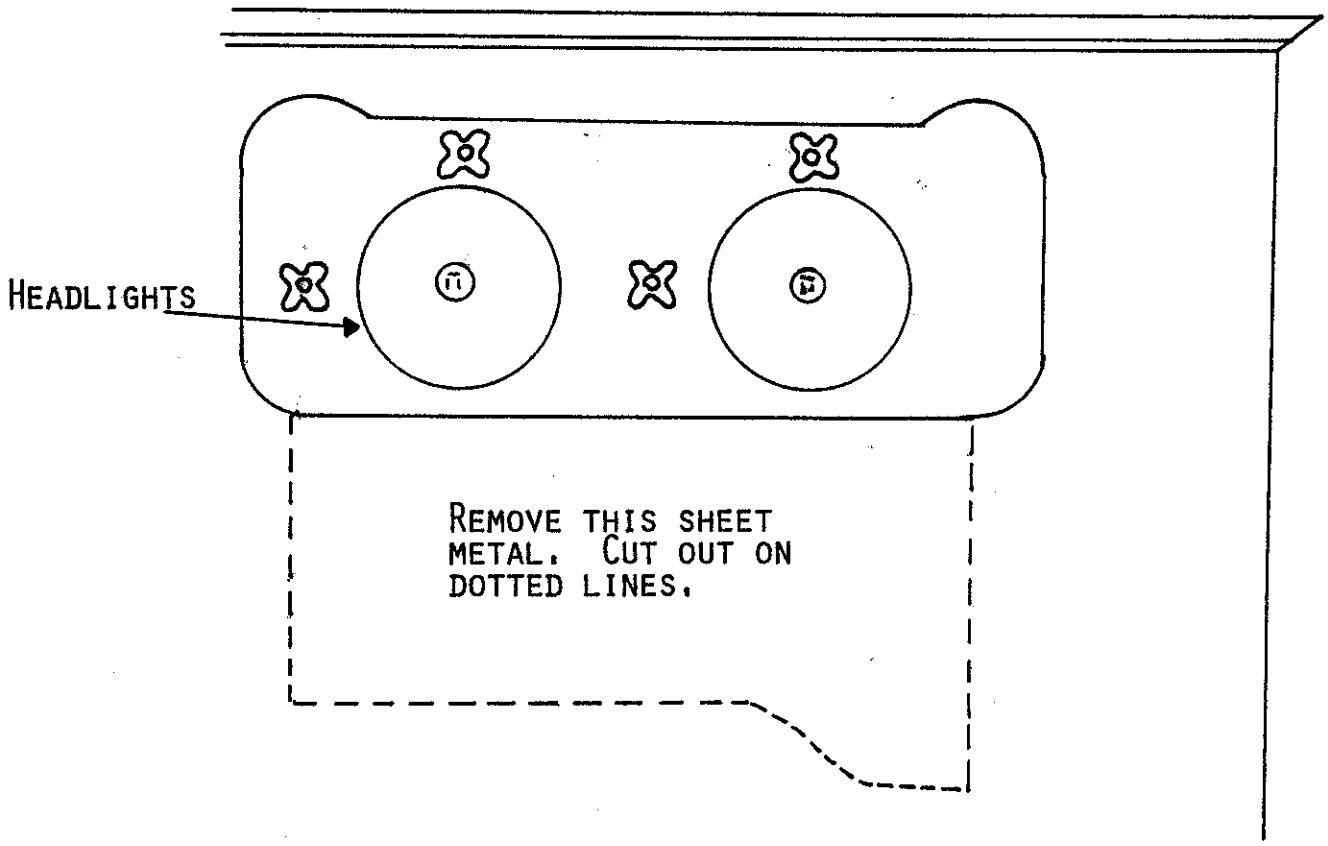

FIGURE 1

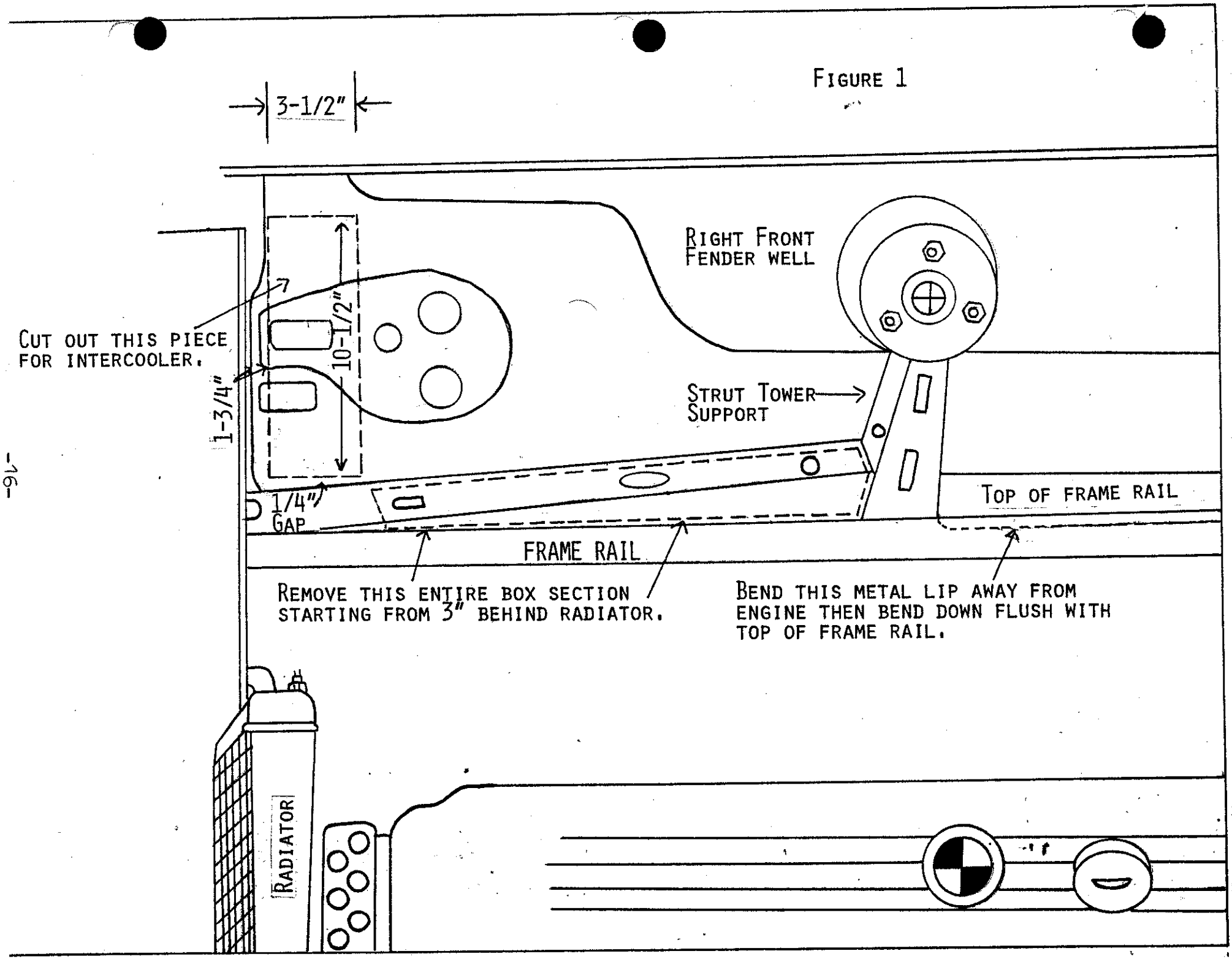
3-1/2"
RIGHT FRONT
FENDER WELL
CUT OUT THIS PIECE
FOR INTERCOOLER.
10-1/2"
1-3/4"
STRUT TOWER
SUPPORT
1/4"
GAP
TOP OF FRAME RAIL
FRAME RAIL
REMOVE THIS ENTIRE BOX SECTION
STARTING FROM 3" BEHIND RADIATOR.
BEND THIS METAL LIP AWAY FROM
ENGINE THEN BEND DOWN FLUSH WITH
TOP OF FRAME RAIL.
RADIATOR

FIGURE 3

1985-> 535I, 635I, 735I
OIL RETURN HOLE IN ENGINE BLOCK

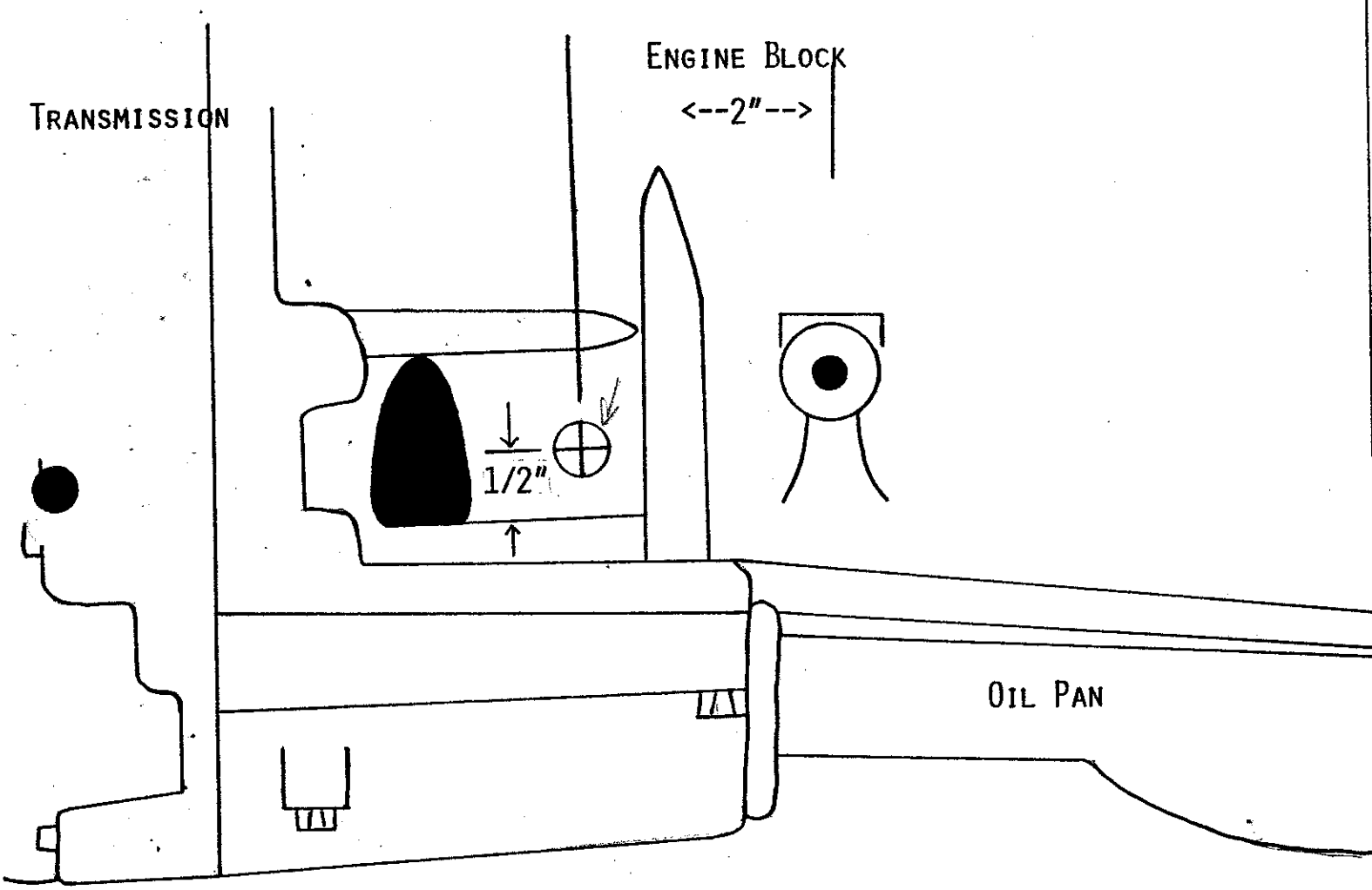

DRILL 11/16" HOLE, THEN TAP 1/2" PIPE THREAD

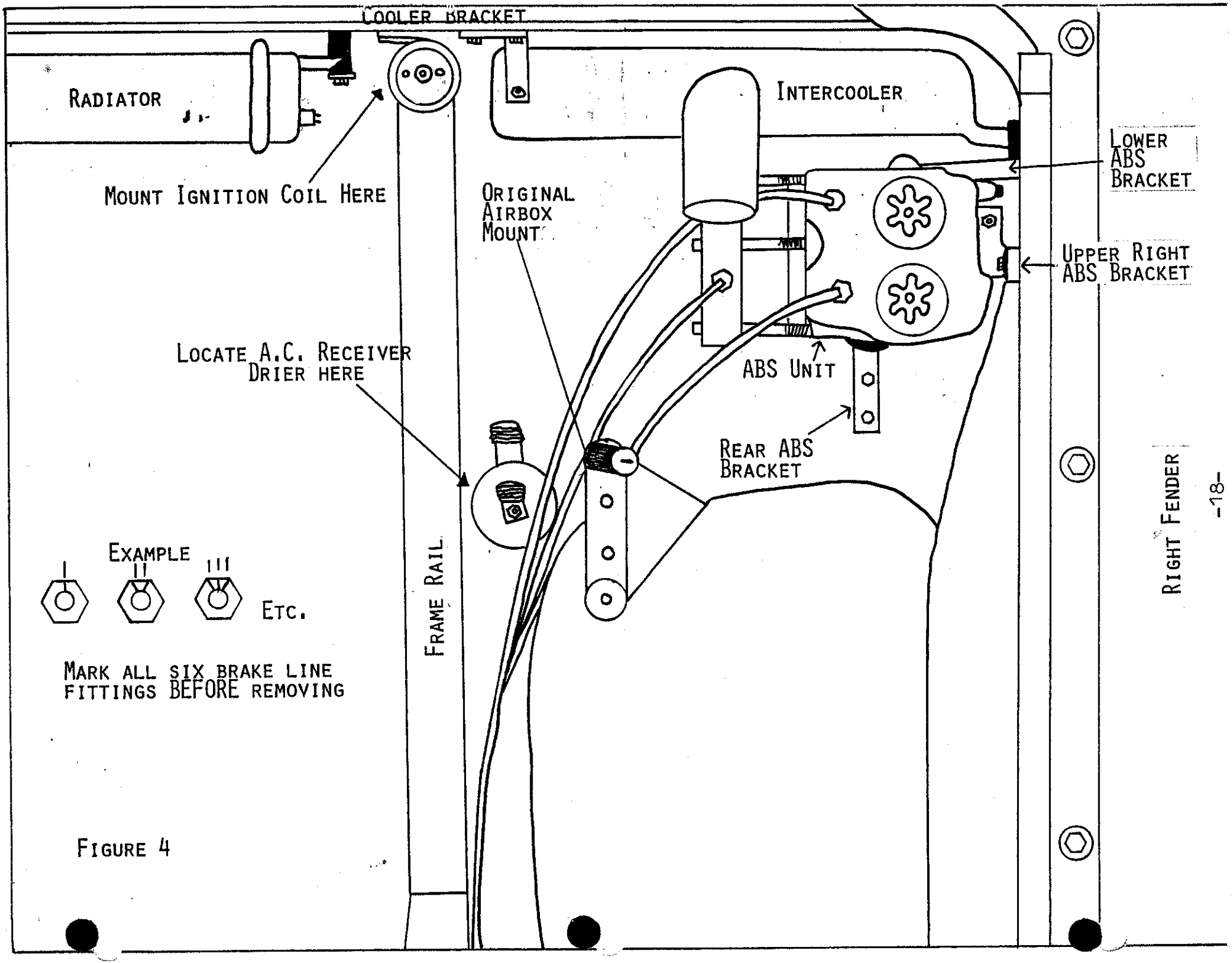
COOLER BRACKET
RADIATOR
INTERCOOLER
LOWER ABS BRACKET
MOUNT IGNITION COIL HERE
ORIGINAL AIRBOX MOUNT
UPPER RIGHT ABS BRACKET
LOCATE A.C. RECEIVER DRIER HERE
ABS UNIT
REAR ABS BRACKET
EXAMPLE
I
II
III
ETC.
FRAME RAIL
RIGHT FENDER
MARK ALL SIX BRAKE LINE FITTINGS BEFORE REMOVING

FIGURE 4

DRILL 21/64" HOLE IN LOCATION SHOWN THEN TAP 1/8" PIPE.

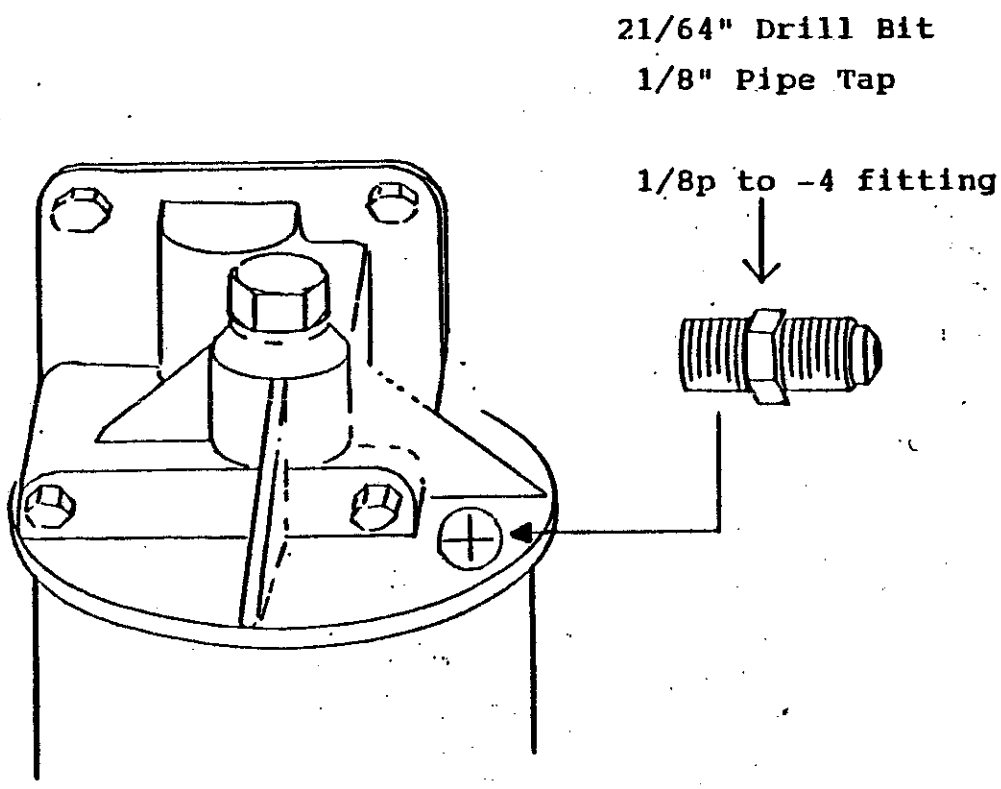

FIGURE 5

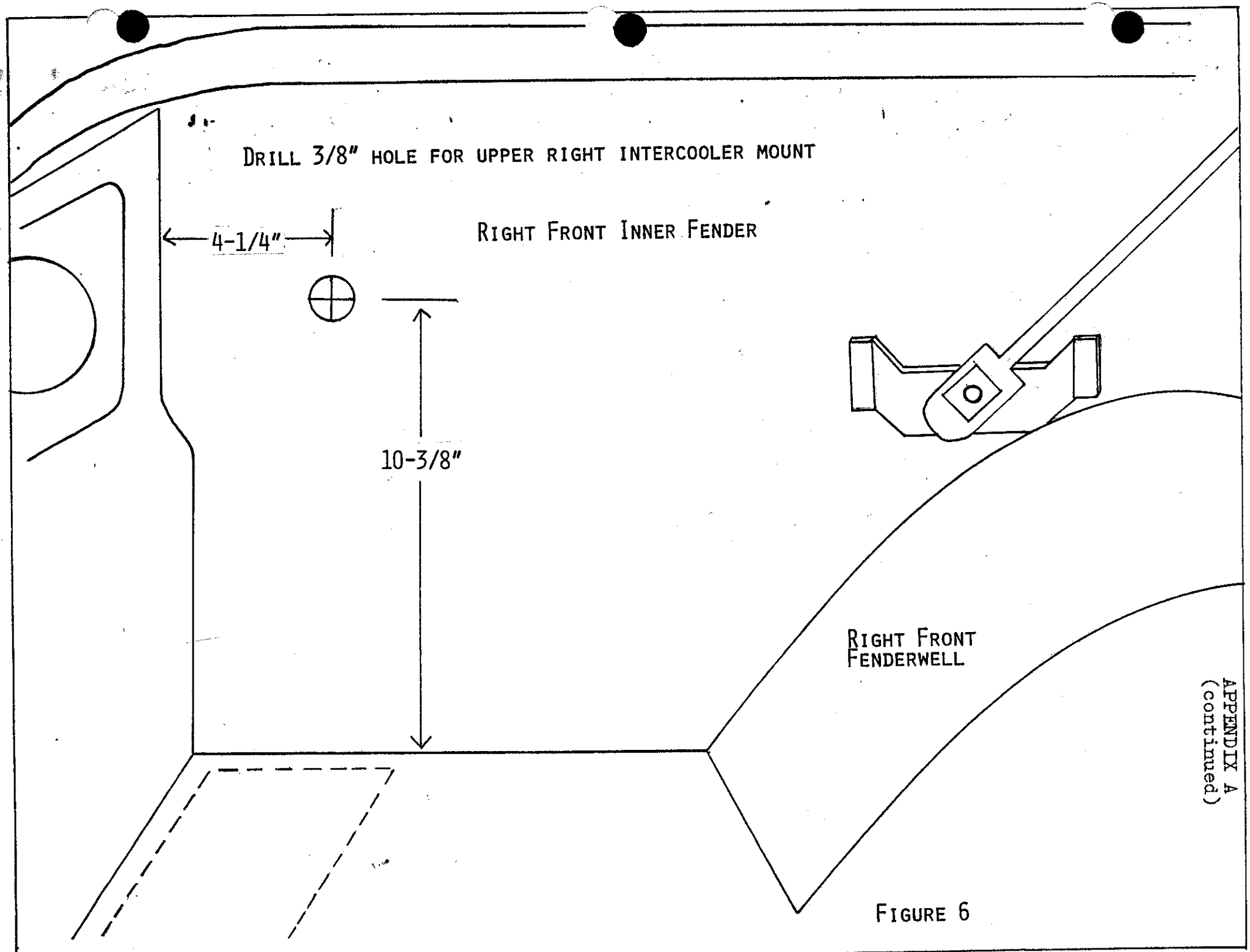

FIGURE 6

APPENDIX A
(continued)

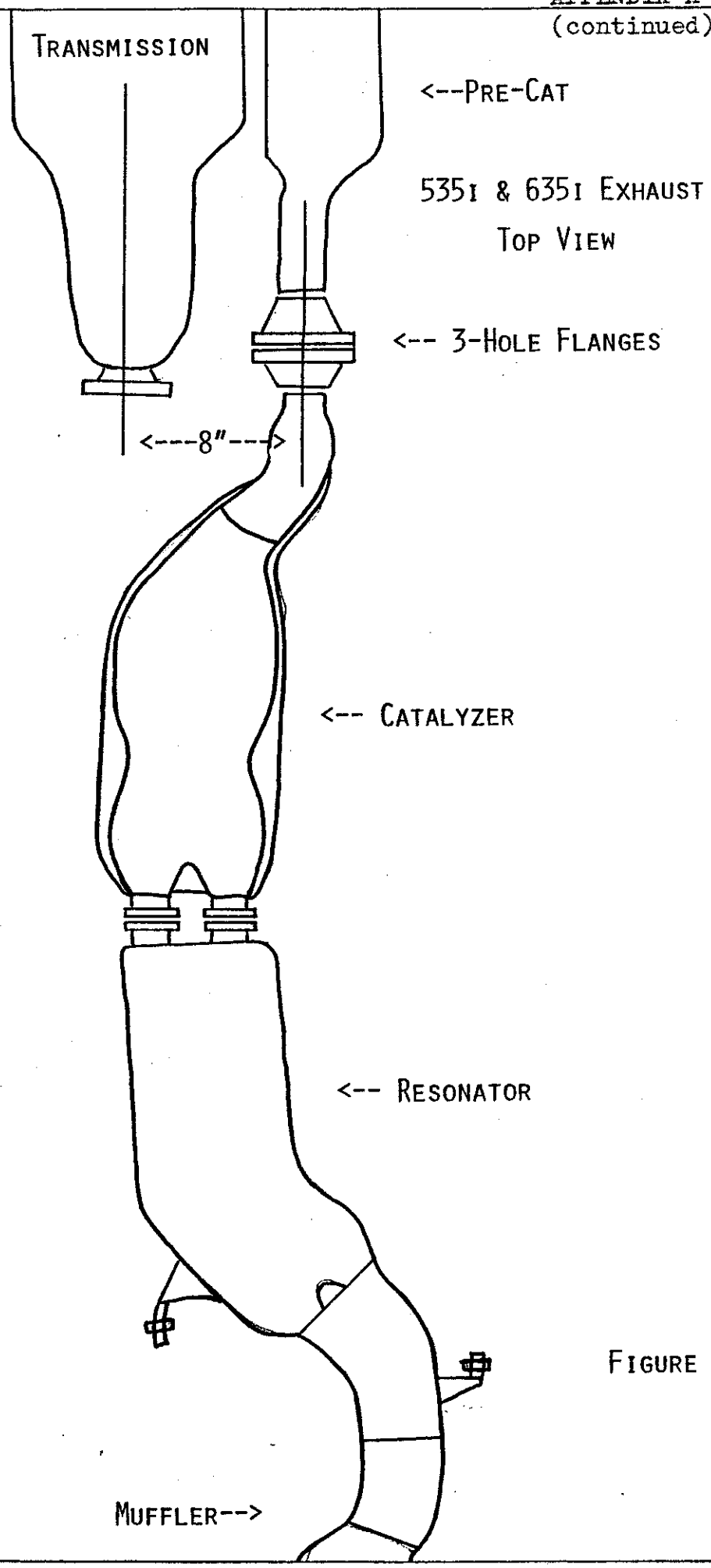
TRANSMISSION
<--PRE-CAT
535I & 635I EXHAUST
TOP VIEW
<-- 3-HOLE FLANGES
<---8"--->
<-- CATALYZER
<-- RESONATOR
MUFFLER-->

FIGURE 7

FIGURE 7A

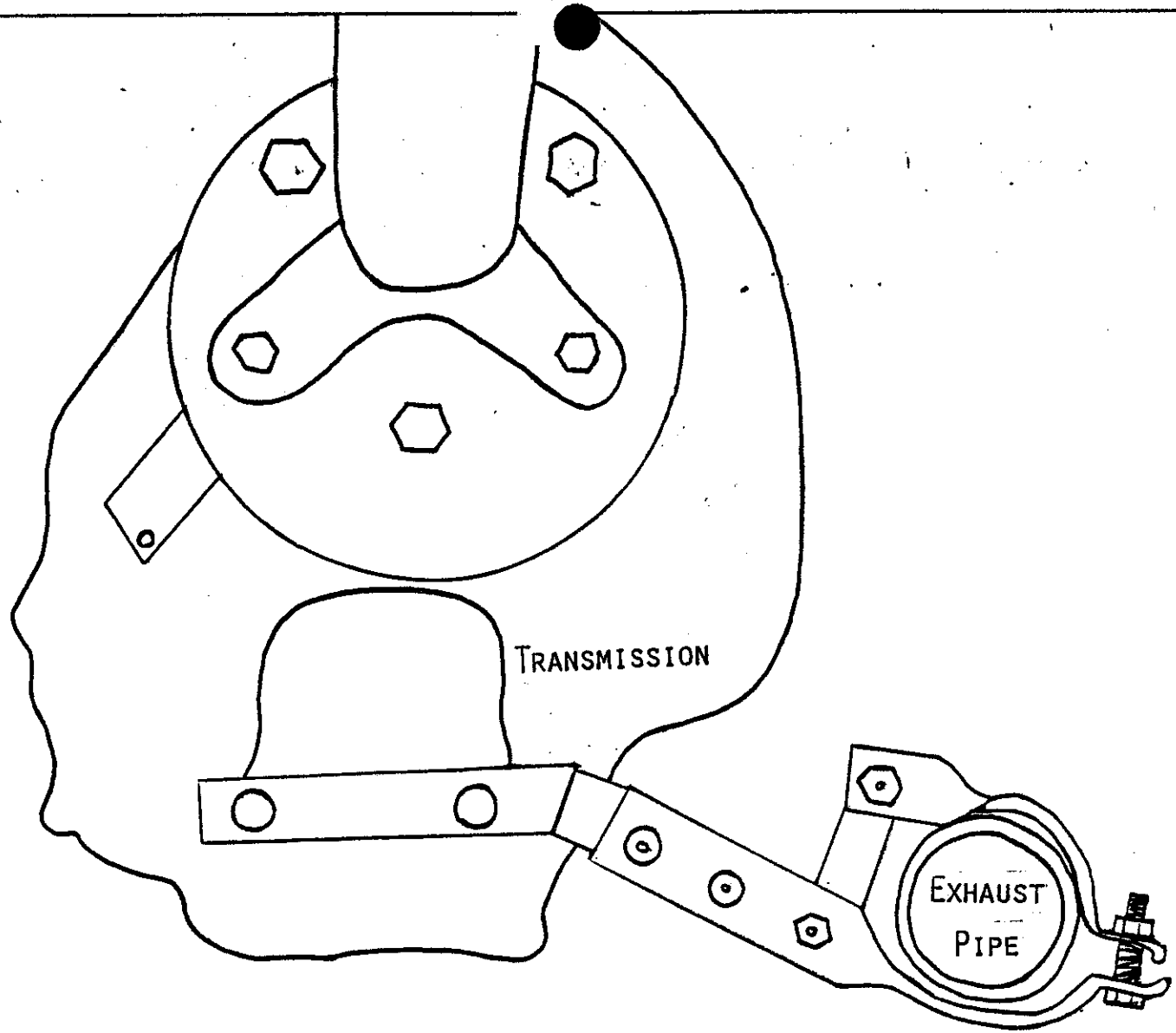

TRANSMISSION TO EXHAUST BRACKET

FIGURE 8

CUT BOTTOM OFF LOWER AIR BOX HALF AS SHOWN BELOW.
DISCARD BOTTOM SECTION.

AFTER BOX IS CUT AND DEBURRED, INSTALL VACUUM HOSES THAT ARE CUT ON ONE SIDE, ON EACH SIDE OF THE BOX.

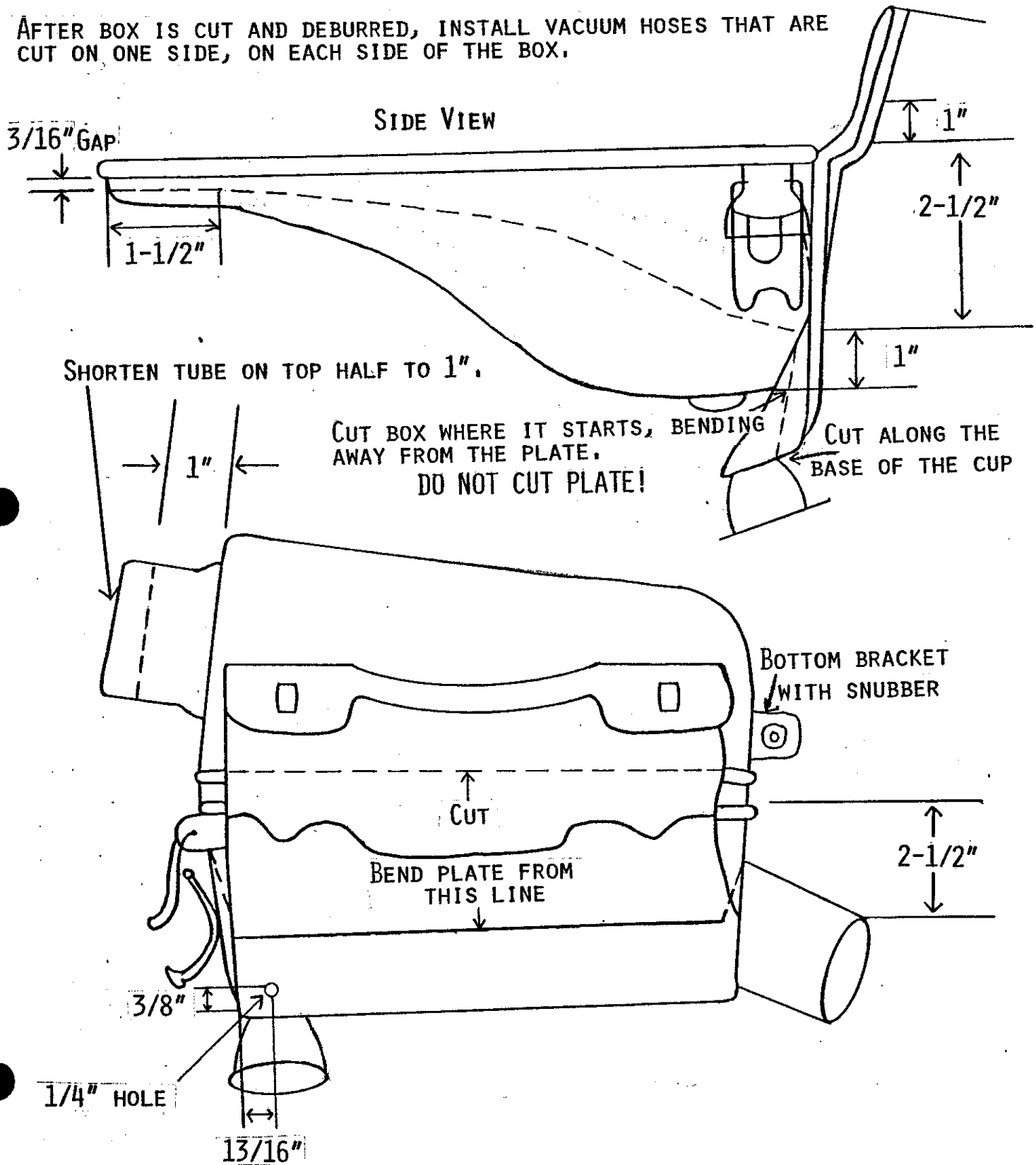

FIGURE 8A

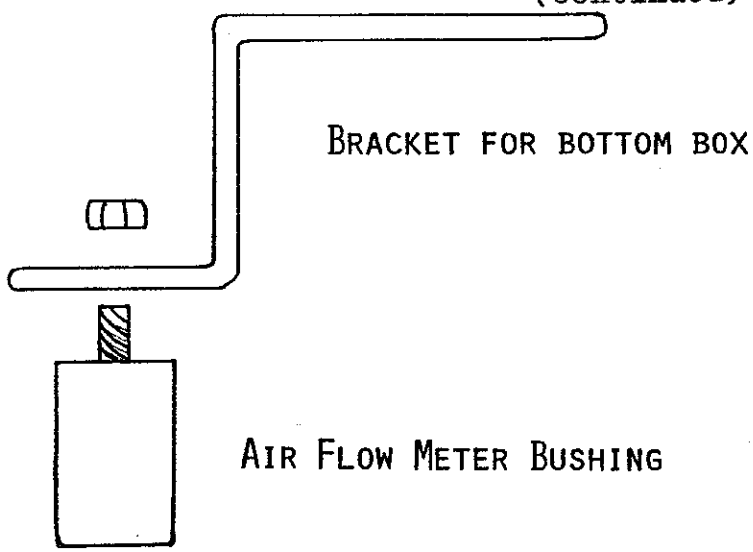

AIR FLOW METER SIDE OF BOX

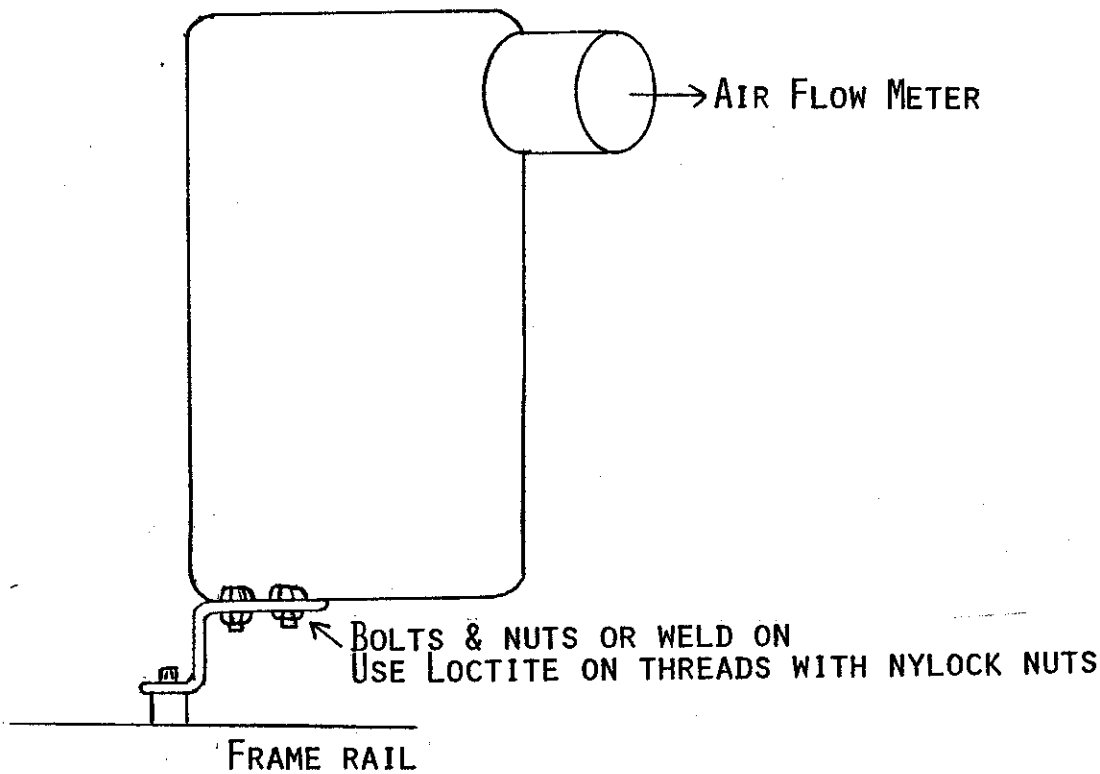

FIGURE 9

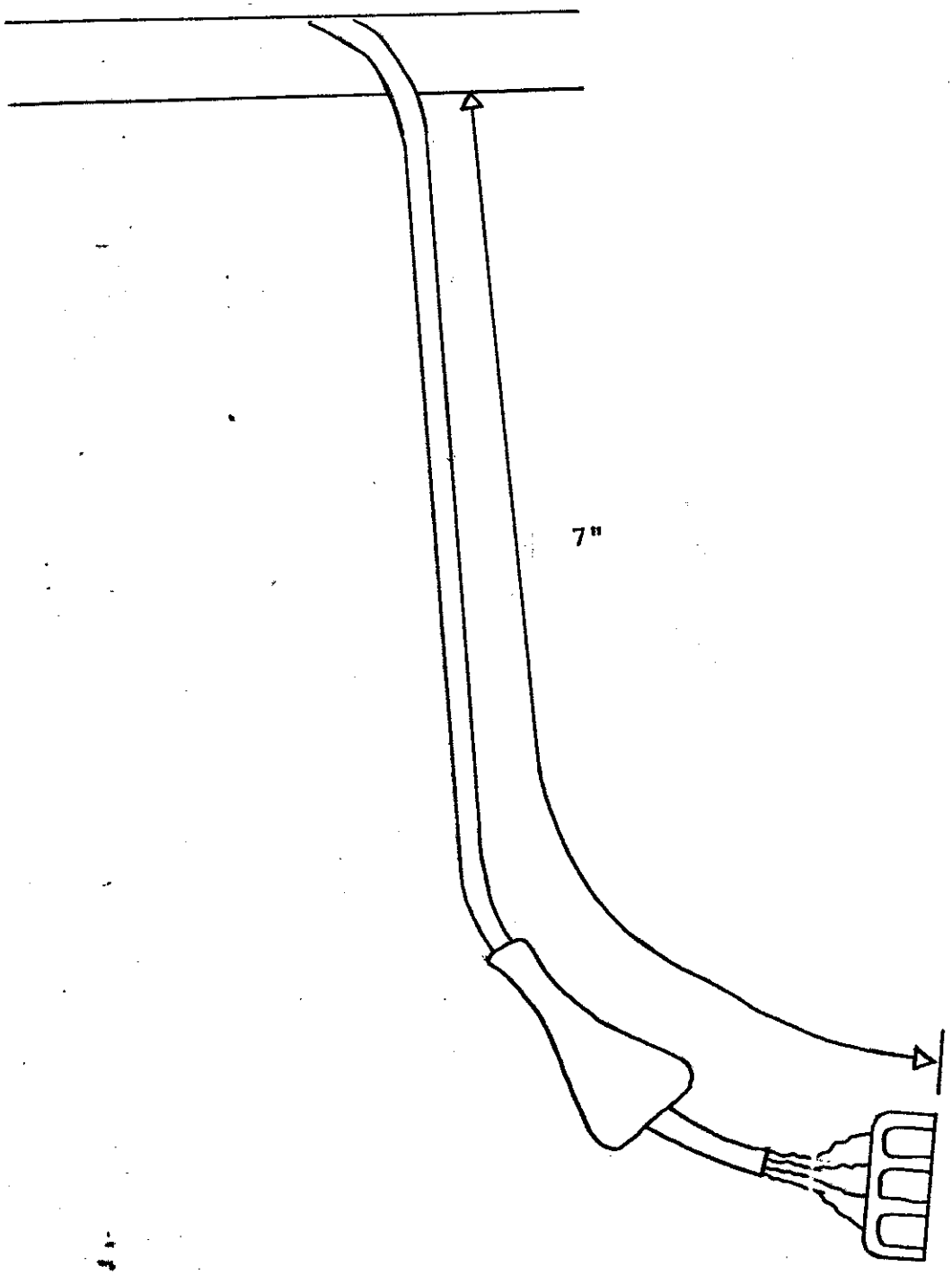

AIR FLOW METER PLUG

APPENDIX A
(continued)

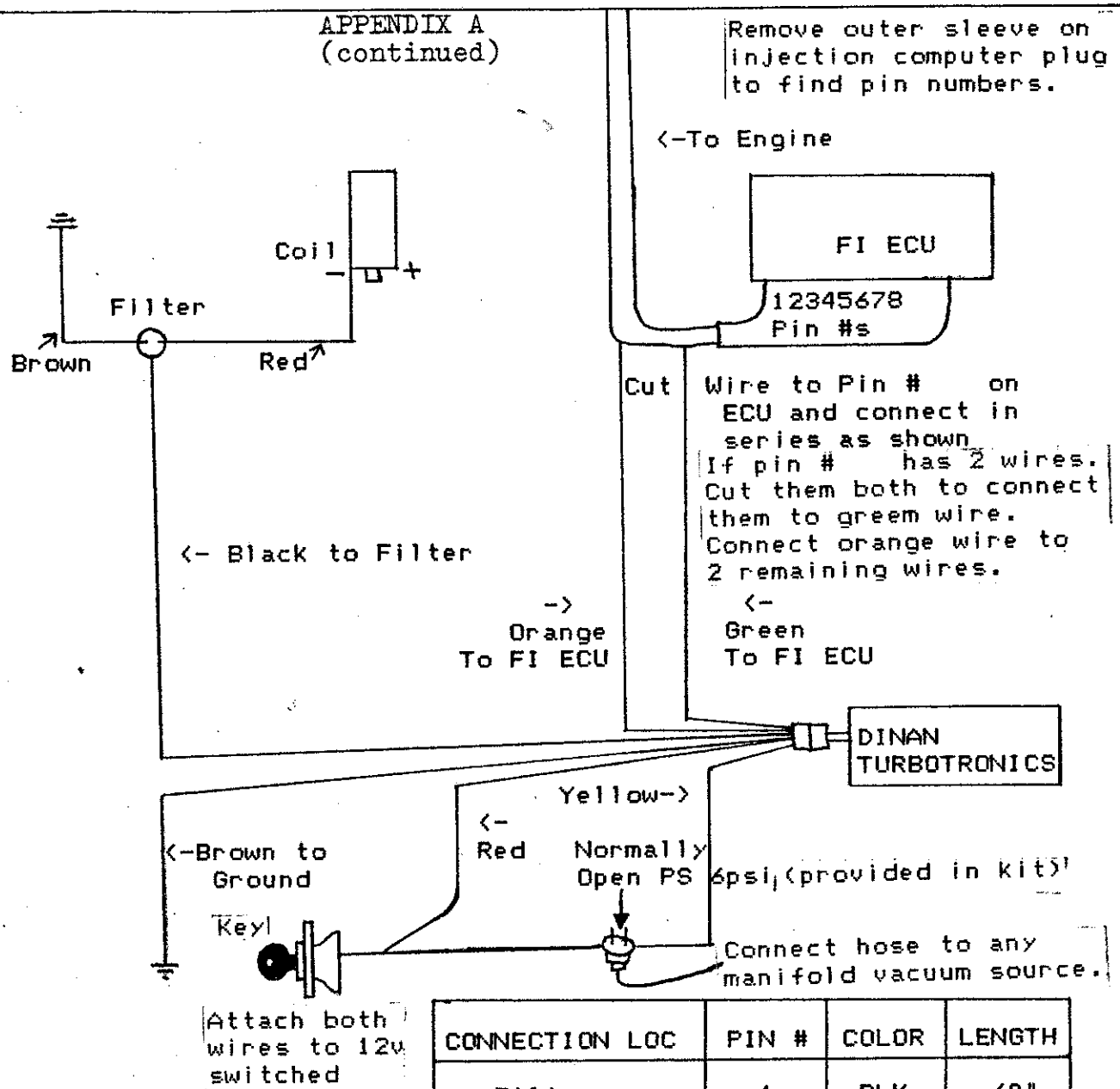

On 79-81 528i and 80-81 633i/733i wire on full open position of throttle positioning switch should be disconnected permanently

CONNECTION LOC	PIN #	COLOR	LENGTH
Filter	1	BLK	60"
FI ECU	2	GRN	12"
FI ECU	3	ORG	12"
Ground	4	BRN	12"
+12v Switched	5	Red	12"
+12v Press Sw	6	Yel	12"

**FI ECU = Fuel Injection Computer

DINAN ENGINEERING	
TURBOTRONICS II	
HARNESS CONNECTIONS	
2-12-86	10187

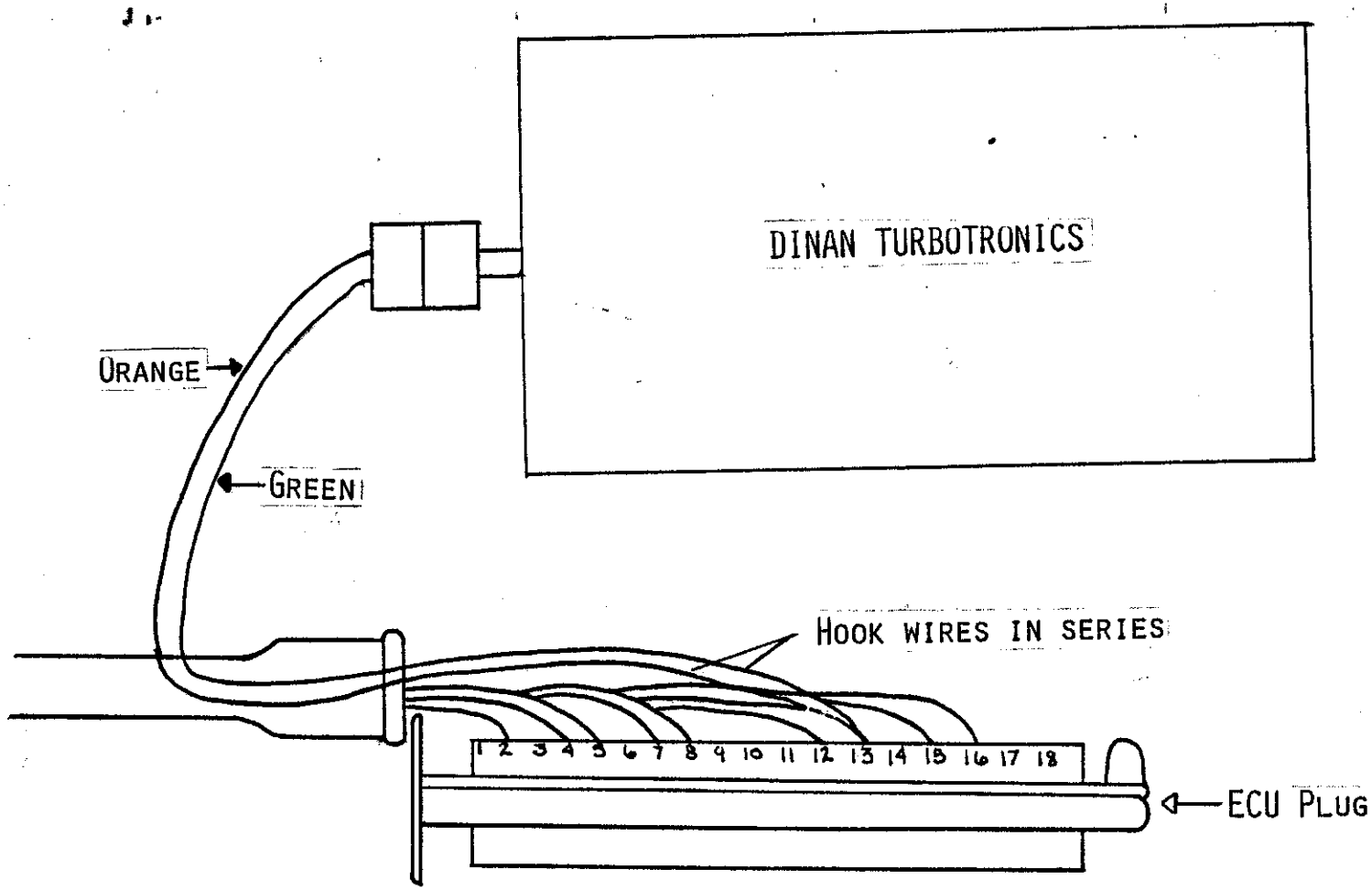
DINAN TURBOTRONICS
ORANGE
GREEN
HOOK WIRES IN SERIES
1 2 3 4 5 6 7 8 9 10 11 12 13 14 15 16 17 18
ECU PLUG

Supplemental Wastegate Manifold Connection
and adjustment proceedure
APPENDIX A
(continued)

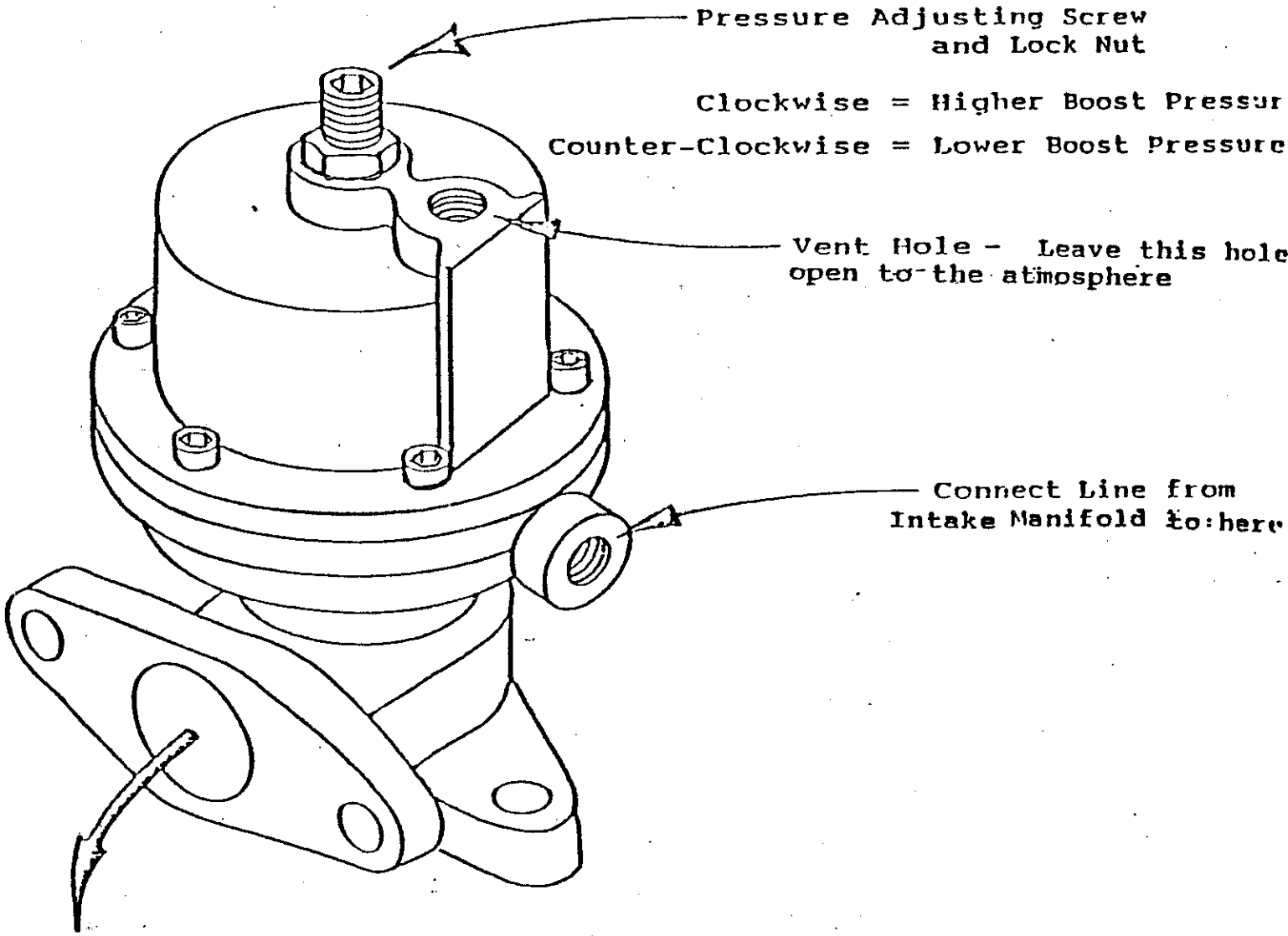

Exhaust Out

APPENDIX B
Identification
Label

DINAN ENGINEERING INC.

81 Pioneer Way • Mountain View, CA 94041 • (415) 962-9417

PART # 35-567-9

E.O. # D-176

ALL TUNE UP SPECIFICATION ARE SAME AS
STOCK FACTORY SETTINGS

Exemption Sticker Prototype