State of California
AIR RESOURCES BOARD

EXECUTIVE ORDER D-215-1
Relating to Exemptions Under Section 27156
of the Vehicle Code

EDELBROCK CORP.
TUBULAR EXHAUST SYSTEM

Pursuant to the authority vested in the Air Resources by Section 27156 of the Vehicle Code; and

Pursuant to the authority vested in the undersigned by Section 39515 and 39516 of the Health and Safety Code and Executive Order G-45-5;

IT IS ORDERED AND RESOLVED: That the installation of the Tubular Exhaust System manufactured by Edelbrock Corp. of 2700 California St., Torrance, California 90503, has been found not to reduce the effectiveness of required motor vehicle pollution control devices, and therefore is exempt from the prohibitions of Section 27156 of the Vehicle Code for those applications listed in Exhibit A, which is attached hereto and incorporated herein.

This Executive Order is valid provided that installation instructions for this device will not recommend tuning the vehicle to specifications different from those submitted by the device manufacturer.

Changes made to the design or operating conditions of the device, as exempted by the Air Resources Board, that adversely affect the performance of a vehicle's pollution control system shall invalidate this Executive Order.

Marketing of this device using an identification other than that shown in this Executive Order or marketing of this device for an application other than those listed in this Executive Order shall be prohibited unless prior approval is obtained from the Air Resources Board. Exemption of a kit shall not be construed as an exemption to sell, offer for sale, or advertise any component of the product as an individual device.

This Executive Order does not constitute any opinion as to the effect that the use of this device may have on any warranty either expressed or implied by the vehicle manufacturer.

THIS EXECUTIVE ORDER DOES NOT CONSTITUTE A CERTIFICATION, ACCREDITATION, APPROVAL, OR ANY OTHER TYPE OF ENDORSEMENT BY THE AIR RESOURCES BOARD OF ANY CLAIMS OF THE APPLICANT CONCERNING ANTI-POLLUTION BENEFITS OR ANY ALLEGED BENEFITS OF THE EDELBROCK #16 GAGE STEEL TUBULAR EXHAUST SYSTEM.

No claim of any kind, such as "Approved by the Air Resources Board" may be made with respect to the action taken herein in any advertising or other oral or written communications.

Section 17500 of the Business and Professions Code makes untrue or misleading advertising unlawful, and Section 17534 makes violation punishable as a misdemeanor.

Section 43644 of the Health and Safety Code provides as follows:

> "43644, (a) No person shall install, sell offer for sale, or advertise or except in an application to the state board for certification of a device, represent, any device as a motor vehicle pollution control device for use on any used motor vehicle unless that device has been certified by the state board. No person shall sell, offer for sale, advertise, or represent any motor vehicle pollution control device as a certified device which, in fact, is not a certified device. Any violation of this subdivision is a misdemeanor."

Any apparent violation of the conditions of this Executive Order will be submitted to the Attorney General of California for such action as he deems advisable.

Executive Order D-215 is superceded and of no further force and effect.

Executed at El Monte, California, this 23 day of December, 1991.

for R.B. Summerfield

R.B. Summerfield
Assistant Division Chief
Mobile Source Division

State of California
AIR RESOURCES BOARD

EVALUATION OF EDELBROCK CORP.'S TUBULAR EXHAUST SYSTEM FOR EXEMPTION FROM THE PROHIBITIONS OF VEHICLE CODE SECTION 27156 IN ACCORDANCE WITH SECTION 2222, TITLE 13, OF THE CALIFORNIA CODE OF REGULATIONS

December 1991

State of California
AIR RESOURCES BOARD

EVALUATION OF EDELBROCK CORP.'S TUBULAR EXHAUST SYSTEM FOR EXEMPTION FROM THE PROHIBITIONS OF VEHICLE CODE SECTION 27156 IN ACCORDANCE WITH SECTION 2222, TITLE 13, OF THE CALIFORNIA CODE OF REGULATIONS

by

Mobile Source Division
State of California
Air Resources Board
9528 Telstar Avenue
El Monte, CA 91731-2990

(This report has been reviewed by the staff of the California Air Resources Board and approved for publication. Approval does not signify that the contents necessarily reflect the views and policies of the Air Resources Board, nor does the mention of trade names or commercial products constitute endorsement or recommendation for use.)

SUMMARY

Edelbrock Corp. (Edelbrock) of 2700 California St., Torrance, California 90503, has requested to update Executive Orders D-215 which exempts Edelbrock's Tubular Exhaust System (TES) from the prohibitions of Vehicle Code Section 27156 of the California Vehicle Code. The existing Executive Order D-215 exempts Edelbrock's TES for installation on 1987-91 General Motors trucks with either a 5.0 or 5.7 liter electronic fuel injected (EFI) or throttle body injection (TBI) engine. The update is requested to include 1992 model-year General Motors trucks with either a 5.0 or 5.7 liter electronic fuel injected (EFI) or throttle body injection (TBI) engine. Edelbrock also requested that 1983-92 General Motors vehicles with either a 4.3, 5.0, 5.7 or 7.4 liter EFI, TBI, or carburated engine be included in the exemption (see appendix A for applications).

Based on an engineering evaluation along with emission test results performed by Edelbrock at an independent laboratory, and that the 1992 vehicles for which the exemption update is requested are carry-overs from the model-years for which an exemption has been granted, the staff concludes that Edelbrock's TES will not adversely affect exhaust emission from the vehicles for which an exemption is requested.

The staff recommends that Edelbrock be granted Executive Order D-215-1 allowing the installation of their TES on those applicable 1983-92 General Motors vehicles with either a 4.3, 5.0, 5.7 or 7.4 liter EFI, TBI, or carburated engine.

TABLE OF CONTENTS

		Page No.
SUMMARY		i
CONTENTS		ii
I.	INTRODUCTION	1
II.	CONCLUSION	1
III.	RECOMMENDATION	2
IV.	TUBULAR EXHAUST SYSTEM DESCRIPTION	2
V.	DISCUSSION OF THE TUBULAR EXHAUST SYSTEM	3
VI.	APPENDIX	5
	APPLICATIONS LIST	6
	INSTALLATION INSTRUCTIONS	8

EVALUATION OF EDELBROCK CORP.'S TUBULAR EXHAUST SYSTEM FOR EXEMPTION FROM THE PROHIBITIONS OF VEHICLE CODE SECTION 27156 IN ACCORDANCE WITH SECTION 2222, TITLE 13, OF THE CALIFORNIA CODE OF REGULATIONS

I. INTRODUCTION

Edelbrock Corp. (Edelbrock) of 2700 California St., Torrance, California 90503, has requested to update Executive Orders D-215 which exempts Edelbrock's Tubular Exhaust System (TES) from the prohibitions of Vehicle Code Section 27156 of the California Vehicle Code. The existing Executive Order D-215 exempts Edelbrock's TES for installation on 1987-91 General Motors trucks with either a 5.0 or 5.7 liter electronic fuel injected (EFI) or throttle body injection (TBI) engine. The update is requested to include 1992 model-year General Motors trucks with either a 5.0 or 5.7 liter electronic fuel injected (EFI) or throttle body injection (TBI) engine. Edelbrock also requested that 1983-92 General Motors vehicles with either a 4.3, 5.0, 5.7 or 7.4 liter EFI, TBI, or carburated engine be included in the exemption (see appendix A for applications).

Edelbrock claims no changes to the installation instructions or tune-up specifications are necessary for use of the TES on the 1992 updates.

II. CONCLUSION

Based on an engineering evaluation along with emission test results performed by Edelbrock at an independent laboratory, and that the 1992 vehicles for which the exemption update is requested are carry-overs from the model-years for which an exemption has been granted, the staff concludes that Edelbrock's TES will not adversely affect exhaust emission from the vehicles for which an exemption is requested.

III. RECOMMENDATION

The staff recommends that Edelbrock be granted Executive Order D-215-1 allowing the installation of their TES on those applicable 1983-92 General Motors vehicles with either a 4.3, 5.0, 5.7 or 7.4 liter EFI, TBI, or carburated engine (see Appendix A).

IV. TUBULAR EXHAUST SYSTEM DESCRIPTION

The Edelbrock TES is specifically designed for installation on those applicable General Motors vehicles with either a 4.3, 5.0, 5.7 or 7.4 liter EFI, TBI, or carburated engine. The TES consists of exhaust manifolds and pre-catalyst piping. As with the original equipment manufacturer's (OEM) exhaust system, the function of Edelbrock's TES is to route exhaust gases from the two exhaust manifolds of the engine into a common pipe which then feeds to the catalytic converter. Edelbrock's family of TES equipment share the same common features: all have the same tubular exhaust flange configuration and thickness, their manifold assemblies are all designed using dual diameter primary pipe components, and the TES intake heat stoves are of the same configuration and dimensions. The tubular exhaust primary pipes have 1-1/2" and 1-5/8" outside diameters. The primary tube diameter on the 4.3 liter engine is 1-5/8" on cylinders 2, 4 and 6, and 1-1/2" on cylinders 1, 3 and 5. The 5.0 and 5.7 liter engines have a primary tube diameter of 1-1/2" on cylinders 1, 4, 6 and 7, and 1-5/8" on cylinders 2, 3, 5 and 8. The primary tube diameter on the 7.4 liter engine is 1-7/8" on cylinders 2, 3, 5 and 8, and 1-3/4" on cylinders 1, 4, 6 and 7. All the exhaust gases are then routed into a 2-1/4" diameter tube for the 4.3 liter and 2-1/2" diameter tube for the 5.0, 5.7 and 7.4 liter which feeds into the precatalyst piping. All tubes are comprised of #16 gage steel.

The TES is functionally identical to the cast iron exhaust manifolds and tubular steel collector pipes of the OEM exhaust system. The difference is the design dimensions of the TES which optimizes the flow characteristics of the exhaust gases. The manufacturer claims TES was designed to improve the flow of exhaust gases from the cylinder heads to the catalytic converter, thereby promoting improved volumetric and combustion efficiency.

The system operates in conjunction with the OEM computer controlled electronic fuel injection and emission control systems already certified with the stock engines. The TES models are available both for vehicles with A.I.R. and without A.I.R. emission control system. The installation of the TES is done by fitting only and requires no welding, modifications or adjustments to the emission control system of the affected vehicles (see Appendix B). Edelbrock supplies complete installation kits, including bolts, flanges, washers, and gaskets.

V. DISCUSSION OF THE TUBULAR EXHAUST SYSTEM

Edelbrock has requested an update to their Executive Orders D-215 to allow the use of the TES on the applicable 1992 model-year vehicles. Their Tubular Exhaust Systems are identical to those previously approved for the 1987-91 trucks. The staff compared the engine design of the 1991 and 1992 model-year trucks. Since the 1992 model-year trucks certified for California sales were carried-over from the 1991 model-year, no additional exhaust emission tests were required or performed.

Edelbrock also requested the exemption to cover installation of TES on 4.3 liter trucks, 5.0 and 5.7 liter passenger cars and 7.4 liter trucks as listed in Appendix A. To evaluate the emission impact of the TES on these vehicles, the staff used prior CVS-75 emission data as well as require Edelbrock to test a 1991 GM 7.4 liter Silverado truck to determine the

emission impact of the TES on bigger engines. Table 1 shows emission test results conducted at Milton Roy Company, Orange, CA on a 7.4 liter truck and previous emission test results conducted on a 5.7 liter truck.

Table 1

CVS-75 Tests Conducted by Edelbrock

	Engine Size (liter)	Vehicle Tested	(HC	CO	NOx) g/m
Device	7.4	91 GM Silverado	.831	8.497	4.925
Baseline		Full Size Truck	.820	8.443	4.65
Difference			+.011	+.054	+.275
Device	5.7	89 GM K1500	.481	4.789	.519
Baseline		Full Size Truck	.486	4.506	.555
Difference			-.005	+.283	-.036

Based on the emission test results, it appears that the TES affects vehicle emission the most when installed on bigger engine sizes. The biggest engine size tested was a 7.4 liter GM truck, but the emission increase due to the use of the TES is within the allowable increase of 10 percent or 0.1 g/mi HC, 15 percent or 1.0 g/mi CO, and 10 percent or 0.1 g/mi NOx above the baseline as specified under the "Procedures for Exemption of Add-On or Modified Parts." The additional vehicle applications requested by Edelbrock are within the range of the two worst case test vehicles. Therefore, staff concludes that based on the two vehicles that Edelbrock has tested, no emission impact would be observed on those applicable 4.3, 5.0, 5.7 and 7.4 liter engines when the TES is installed.

The staff recommends that Edelbrock be granted Executive Order D-215-1 allowing the installation of their TES on those applicable 1983-92 General Motors vehicles with either a 4.3, 5.0, 5.7 or 7.4 liter EFI, TBI, or carburated engine (see appendix A for applications).

APPENDIX

Appendix A

EDELBROCK TUBULAR EXHAUST SYSTEMS

CAMARO IROC & Z28 and PONTIAC FIREBIRD FORMULA

Edelbrock PN	PN	Vehicle Model	Year	Engine	Remarks
6871	7971	Chevrolet Camaro and Pontiac Firebird	1982-86	5.0L V8	Not for H.O. or TPI
6872	7972	Chevrolet Camaro IROC & Z28 and Pontiac Firebird Formula	1986-90	5.0 & 5.7L V8	TPI (Single Cat.)
6873	7973	Chevrolet Camaro IROC and Pontiac Firebird Formula	1985	5.0 & 5.7L V8	TPI (Single Cat.)
6874	7974	Chevrolet Camaro H.O. and Pontiac Firebird H.O.	1983-85	5.0L V8	4-bbl. carburetor H.O.
6875	7975	Chevrolet Camaro RS and Pontiac Firebird Formula	1988-92	5.0L V8	TBI (Single Cat.)
6875	7975	Chevrolet Camaro Z28/Conv. and Pontiac Firebird Formula	1991-92	5.0L V8	TPI (Single Cat.)
6878	7978	Chevrolet El Camino/ Monte Carlo	1983-88	5.0L LG-4 V8	Low output
6879	7979	Chevrolet El Camino/ Monte Carlo	1983-88	5.0L L-69 V8	High output

CHEVROLET BLAZER AND GMC JIMMY

Edelbrock PN	PN	Vehicle Model	Year	Engine	Remarks
6854	7954	P/U S-10 & S-15	1988-92	4.3L V6	2 W.D. Fuel Injection
6855	7955	Blazer S-10 & Jimmy S-15	1988-92	4.3L V6	2 W.D. Fuel Injection
6856	7956	P/U Blazer S-10 & Jimmy S-15	1988-92	4.3L V6	4 W.D. Fuel Injection
6834	7934	P/U S-10 & S-15	1988-92	4.3L V6	2 W.D. Fuel Injection
6835	7935	Blazer S-10 & Jimmy S-15	1988-92	4.3L V6	2 W.D. Fuel Injection
6836	7936	P/U Blazer S-10 & Jimmy S-15	1988-92	4.3L V6	4 W.D. Fuel Injection

CORRECTIONS TO THE ORIGINAL C.A.R.B. E.O. D-215 CHEVROLET AND GMC LIGHT DUTY TRUCKS

Edelbrock PN	PN	Vehicle Model	Year	Engine	Remarks
6866	7966	P/U 1500 & 2500 Series	1988-92	5.0 & 5.7L V8	4 W.D., EFI w/o A.I.R.
6867	7967	P/U 1500 & 2500 Series	1988-92	5.0 & 5.7L V8	4 W.D., EFI w/ A.I.R.
6864	7964	Suburban 1500 & 2500 Series	1987-91	5.7L V8	4 W.D., EFI w/o A.I.R.
6865	7965	Suburban 1500 & 2500 Series	1987-91	5.7L V8	4 W.D., EFI w/ A.I.R.
6824	7924	Suburban 1500 & 2500 Series	1987-90	5.7L V8	2 W.D., EFI w/o A.I.R.
6825	7925	Suburban 1500 & 2500 Series	1987-90	5.7L V8	2 W.D., EFI w/ A.I.R.
6826	7926	Suburban 1500 & 2500 Series	1991	5.7L V8	2 W.D., EFI w/o A.I.R.
6857	7957	K-5 Blazer/Jimmy	1987-91	5.7L V8	4 W.D., EFI w/o A.I.R.
6858	7958	K-5 Blazer/Jimmy	1987-91	5.7L V8	4 W.D., EFI w/ A.I.R.
6889	7989	P/U 1500 & 2500 Series	1988-92	4.3L V6	2 W.D., EFI w/ A.I.R.

EDELBROCK TUBULAR EXHAUST SYSTEMS

CHEVROLET/GMC 7.4L HEAVY DUTY VEHICLES

Edelbrock PN	PN	Vehicle Model	Year	Engine	Remarks
6838	7938	Suburban 2500 Series	1987-89	7.4 Litre V8	w/ A.I.R.
6839	7939	Suburban 2500 Series	1990-92	7.4 Litre V8	w/o A.I.R.
6861	7961	Crew Cab 3500 Series	1987-89	7.4 Litre V8	2 W.D. w/ A.I.R.
6862	7962	Crew Cab 3500 Series	1987-89	7.4 Litre V8	4 W.D. w/ A.I.R.
6841	7941	Crew Cab 3500 Series	1990-92	7.4 Litre V8	2 W.D. w/o A.I.R.
6842	7942	Crew Cab 3500 Series	1990-92	7.4 Litre V8	4 W.D. w/o A.I.R.
6860	7960	Pick-up 1500 Series (454SS)	1990	7.4 Litre V8	2 W.D., F.I. w/ A.I.R.
6859	7959	Pick-up 2500 & 3500 Series	1988-92	7.4 Litre V8	2 W.D., F.I. w/o A.I.R
6860	7960	Pick-up 2500 & 3500 Series	1988-92	7.4 Litre V8	2 W.D. F.I. w/ A.I.R.

TUBULAR EXHAUST SYSTEM

CATALOG #6873

1985 IROC Camaro 305 &350 c.i.d.V8
T.P.I. auto & standard transmission (single converter)
INSTRUCTIONS

- **PLEASE** study these instructions carefully before installing your new Tubular Exhaust System (TES). If you have any questions or problems, do not hesitate to contact our **Technical Hotline at : (213) 781-9318.**

- **TUBULAR EXHAUST SYSTEM:** These components are designed as a system to improve the exhaust efficiency of the GM T.P. I. (tuned port injection) V8 engine. A performance gain can be expected by the installation of the system. This system requires no welding for installation and retains all O.E.M. emissions equipment.

- **SUGGESTED TOOLS FOR INSTALLATION:** This vehicle has some metric fasteners
  - — 3/8" ratchet socket set with extensions and universal 13mm and 15mm swivel sockets
  - — Combination set of open-end wrenches
  - — Jackstands, screwdrivers, pliers, crescent wrench, etc.
  - — Liquid penetrant, (GM #1052627) anti-seize compound (GM #5613695)
  - — Spark plug wire crimping tool

- **DISASSEMBLY**
  1. Disconnect battery negative cable from battery.
  2. Raise vehicle and support with jackstands.
  3. Use penetrating oil on all nuts and bolts to be removed. This will prevent the possibility of broken or stripped nuts and bolts.
  4. Making sure converter is cool, remove the catalytic converter.
  5. Remove crossover exhaust pipe.
  6. Lower vehicle to the ground

  DISASSEMBLY LEFT SIDE
  1. Remove air cleaner system (note position of line and hose connections).
  2. Disconnect A.I.R. (air injection reactor) hose from exhaust manifold.
  3. Remove air conditioner compressor rear support bracket (if air conditioning is applicable.
  4. Remove power steering pump support bracket (if power steering is applicable.
  5. Disconnect spark plug wires and remove spark plugs.
  6. Remove 02 sensor, being careful not to rupture or destroy the unit.WARNING: Do not clean this unit in any cleaning solvents and do not rupture wire.
  7. Disconnect temperature sensor wire at cylinder head.
  8. Remove temperature sensor wire support bracket from valve cover bolt and lay wire back over engine.
  9. Remove bolts and exhaust manifold from top side.
  10. Disconnect steering column connector and lower slip tube down to steering box. CAUTION: Do not turn steering wheel or front wheels while this system is disconnected.

- **DISASSEMBLY RIGHT SIDE**
  1. Disconnect A.I.R. injection hose from exhaust manifold and catalytic converter tube.
  2. Disconnect electrical connector and vacuum hoses from A.I.R. diverter valve assembly (note position of hose and electrical connections).
  3. Remove A.I.R. pump feed hose from diverter valve assembly.
  4. Remove nut from diverter valve support bracket at exhaust manifold and loosen lower alternator pivot bolt, then remove diverter valve assembly.
  5. Disconnect spark plug wires and remove spark plugs.
  6. Remove dip stick and tube from engine. CAUTION: Do not damage tube.
  7. Remove bolts and exhaust manifold from top side.
  8. At this time clean exhaust flange surfaces on cylinder heads.
  9. Unbolt oil coolant tube from frame rail and bend rear brace around tube. Bolt new flat brace (supplied) to frame rail. This will move coolant tube above and on top of frame which will allow more clearance for exhaust system.

- ASSEMBLY LEFT SIDE
  1. Install T.E.S. flange gasket and one 3/8" 16 x 1" bolt and lock washer at rearmost bolt hole (leave bolt loose enough to accept T.E.S.)

© 1989 Edelbrock Corp.

2. Install left side T.E.S. manifold from top side.
3. Install all but the front three bolts and washers on left side (do not tighten at this time).
4. Reinstall rear power steering support bracket. Do not tighten at this time.
5. Reinstall rear A/C support bracket with bolts, lock washers and spacers supplied (see Figure 2 for spacer locations).
6. Align all parts and tighten left side bolts and nuts at this time.
7. Reconnect steering column coupler. WARNING: Make sure coupler bolt is tight and check to see that steering wheel is in same orientation as prior to disassembly.
8. Form brake lines to clear T.E.S. pipes.
9. Reinstall spark plugs and reconnect wires left side.
10. Change spark plug wire ends and boots as needed.
11. Reinstall temperature sensor wire support bracket and reconnect wire to temperature sensor.

- **ASSEMBLY RIGHT SIDE**
  1. Install T.E.S. flange gasket and one 3/8" - 16 x 1" bolt and lock washer at rearmost bolt hole (leave bolt loose enough to accept T.E.S.).
  2. Install right side T.E.S. manifold from top side with dip stick tube at same time.
  3. Install remaining bolts, lock washers and dip stick tube bracket (see Figure 1). Do not tighten bolts at this time.
  4. Reinstall O.E.M. front stud bolt with spacer (supplied). Align all parts and tighten all right side bolts at this time.
  5. Reinstall spark plugs and reconnect wires.
  6. Change spark plug wire ends and boots as needed.
  7. Reinstall diverter valve assembly in front O.E.M. stud bolt and tighten.
  8. Reconnect electrical connections and vacuum lines to diverter valve assembly.
  9. Remove A.I.R. check valves from O.E. manifolds and reinstall them on T.E.S. For 1986 & 1987 models, use plastic connector and 5" hose supplied . Reconnect air hoses. For 1988 models remove 1/2" from formed 900 rubber O.E.M. elbow and install plastic connector. Use 2" of hose supplied and reconnect air hose. Reconnect all injection hoses at this time.
  10. Raise vehicle and support with jackstands.

- **CROSSOVER PIPE ASSEMBLY**
  1. Assemble both lower pipes with catalytic converter, adapter and clamp (1985 only). Do not clamp tight at this point.
  2. Install crossover pipe assembly on vehicle with four 3/8" bolts (lock and flat washers and gaskets supplied). Do not tighten at this time.
  3. Form A.I.R. injection tube to catalytic converter. Align and tighten all bolts and clamps.
- **LOWER VEHICLE TO THE GROUND**
  1. Connect negative cable to battery. At this point, it would be a good idea to look everything over and make sure nothing is missed in assembly.
  2. Start vehicle and bring up to normal operating temperature and check for possible leaks.
  3. Turn engine off and let cool. Then tighten all bolts again.

- **HARDWARE SUPPPLIED**

1—Manifold left side #25-9007
1—Manifold right side #25-9009
1—Extension pipe left side #25-9508
1—Extension pipe right #25-9509
1—Adapter #25-9510
1—Dip stick tube bracket
1—1/4" - 28 x 5/8" hex cap screw
1—1/4" - 28 hex nut
1—1/4" split lock washer

1—1/4" flat washer
2—5/8" x 1.53 Tube spacer
1—5/8" x .72 Tube spacer
1—5/8" x 1.12 Tube spacer
2—2-1/2" donut gaskets
1—Flange connector
1—2-1/2" U muffler clamp
1—12" 02 sensor pig tail wire

1—Coolant tube bracket
2—Chevrolet V8 port gaskets
4—3/8" - 16 x 2" Hex cap screws
12—3/8" - 16 x 1" Header bolts
2—3/8"- 16 x 2-3/4" Header bolts
12—3/8" Split lock washers
4—3/8" A N flat washers
1—02 Sensor plug (if needed)

Figure 1
Right Side

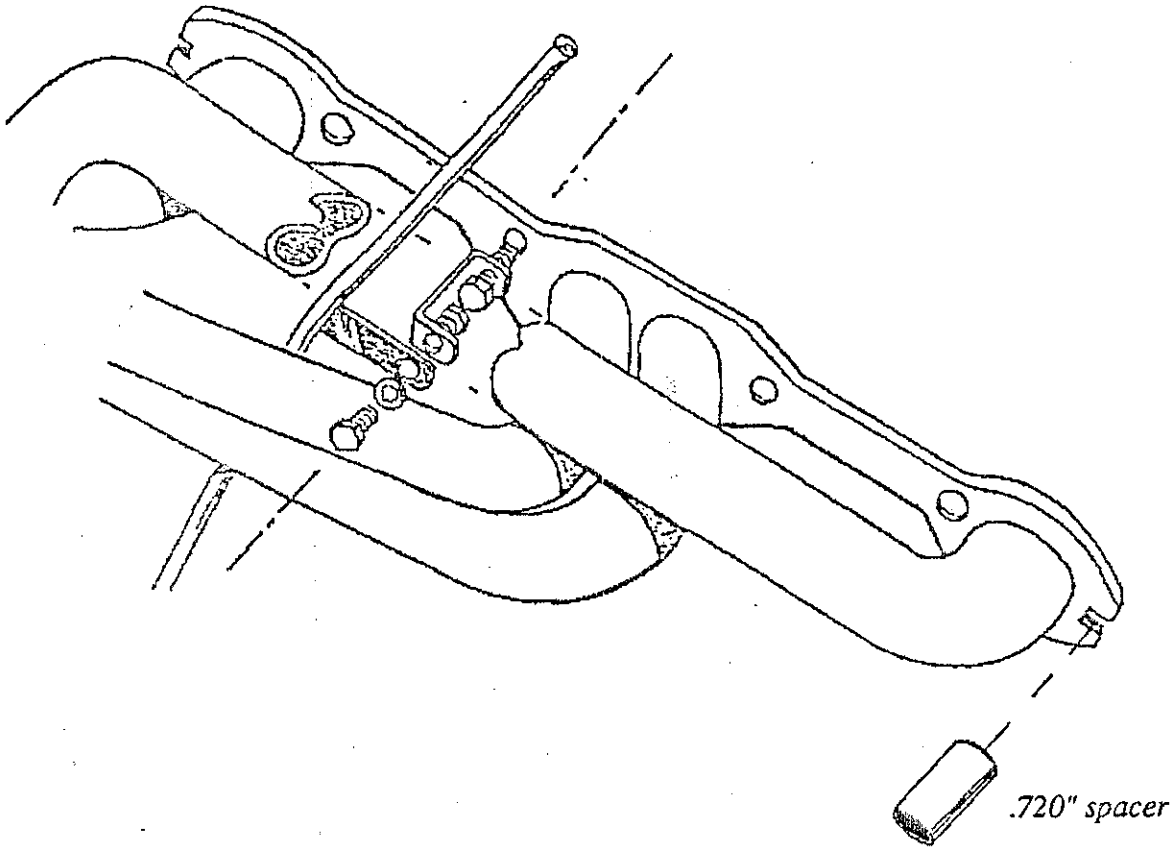
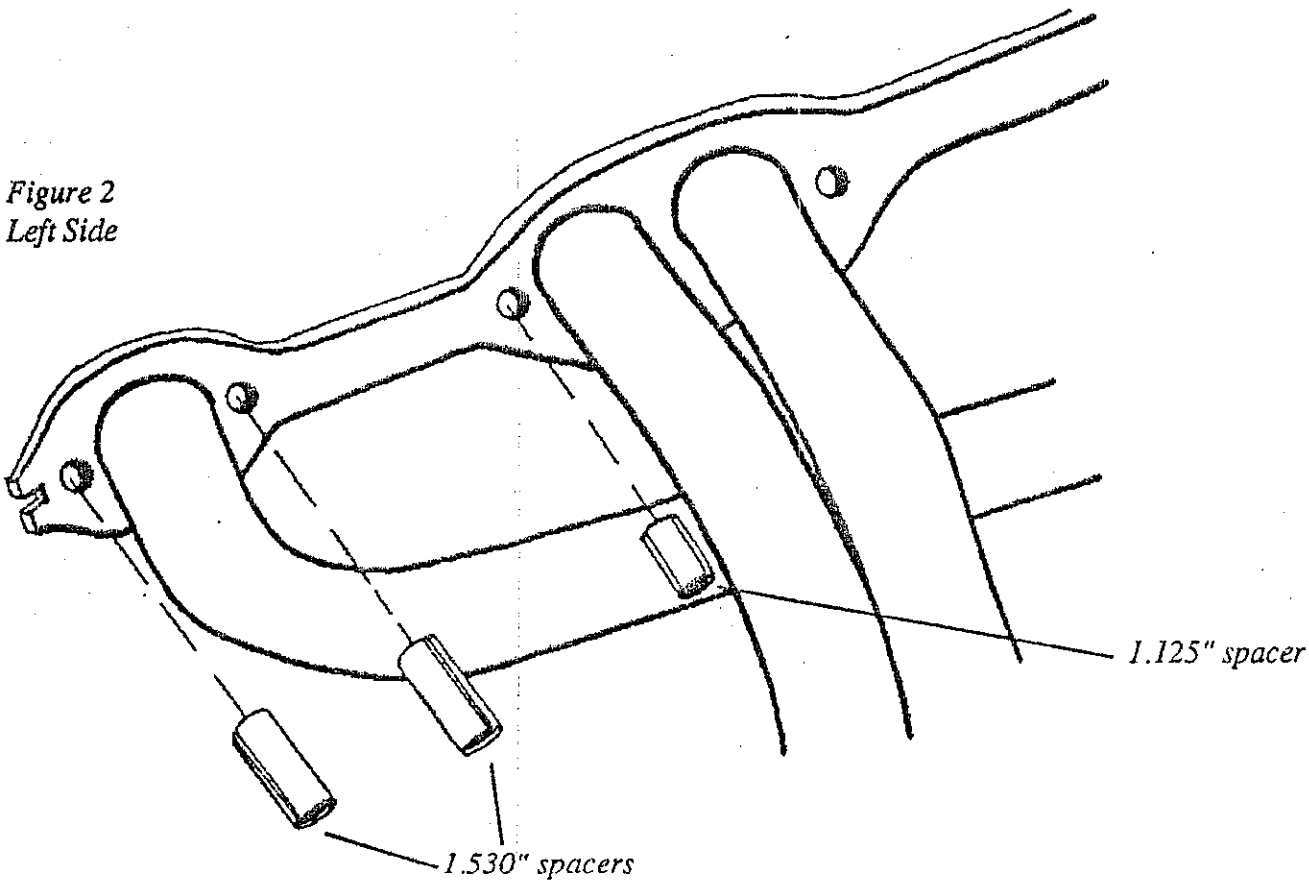
Figure 2
Left Side