 E.O. Book

State of California
AIR RESOURCES BOARD

EXECUTIVE ORDER D-74
Relating to Exemptions under Section 27156
of the Vehicle Code

ROBERT BOSCH CORPORATION
"ROBERT BOSCH BREAKERLESS TRANSISTORIZED
IGNITION SYSTEM (TCI-h)"

Pursuant to the authority vested in the Air Resources Board by Section 27156 of the Vehicle Code; and

Pursuant to the authority vested in the undersigned by Section 39515 of the Health and Safety Code and Executive Order G-30A;

IT IS ORDERED AND RESOLVED: That the installation of the Robert Bosch Breakerless Transistorized Ignition System (TCI-h) manufactured by Robert Bosch GmbH, Germany, and marketed by Robert Bosch Corporation, 345 E. Grand Ave., South San Francisco, California 94080, has been found to not reduce the effectiveness of required motor vehicle pollution control devices and, therefore, is exempt from the prohibitions of Section 27156 of the Vehicle Code for installation on 1972 through 1976 model year 4 cylinder vehicles equipped with a Bosch distributor using a standard Kettering ignition system except those vehicles equipped with capacitive discharge or transistorized ignition systems.

This Executive Order is valid provided that installation instructions for this device will not recommend tuning the vehicle to specifications different from those listed by the vehicle manufacturer.

Changes made to the design or operating conditions of the device, as exempted by the Air Resources Board, that adversely affect the performance of a vehicle's pollution control system shall invalidate this Executive Order.

Marketing of this device using an identification other than that shown in this Executive Order or marketing of this device for an application other than those listed in this Executive Order shall be prohibited unless prior approval is obtained from the Air Resources Board.

This Executive Order does not constitute any opinion as to the effect that the use of this device may have on any warranty either expressed or implied by the vehicle manufacturer.

THIS EXECUTIVE ORDER DOES NOT CONSTITUTE A CERTIFICATION, ACCREDITATION, APPROVAL, OR ANY OTHER TYPE OF ENDORSEMENT BY THE AIR RESOURCES BOARD OF ANY CLAIMS OF THE APPLICANT CONCERNING ANTI-POLLUTION BENEFITS OR ANY ALLEGED BENEFITS OF THE ROBERT BOSCH BREAKERLESS TRANSISTORIZED IGNITION SYSTEM (TCI-h).

No claim of any kind, such as "Approved by Air Resources Board" may be made with respect to the action taken herein in any advertising or other oral or written communication.

Section 17500 of the Business and Professions Code makes untrue or misleading advertising unlawful, and Section 17534 makes violation punishable as a misdemeanor.

Section 43644 of the Health and Safety Code provides as follows:

> "43644. (a) No person shall install, sell, offer for sale, or advertise, or, except in an application to the state board for certification of a device, represent, any device as a motor vehicle pollution control device for use on any used motor vehicle unless that device has been certified by the state board. No person shall sell, offer for sale, advertise, or represent any motor vehicle pollution control device as a certified device which, in fact, is not a certified device. Any violation of this subdivision is a misdemeanor."

Any apparent violation of the conditions of this Executive Order will be submitted to the Attorney General of California for such action as he deems advisable.

Executed at Sacramento, California, this 31st day of ~~April~~ May, 1977.

Original Signed By

Thomas C. Austin
Deputy Executive Officer-Technical

State of California

AIR RESOURCES BOARD

March 20, 1977

Staff Report

Evaluation of Robert Bosch Corporation "Robert Bosch Breakerless Transistorized Ignition System (TCI-h)" for Compliance with Requirements of Section 27156 of the Motor Vehicle Code

I. Introduction

Robert Bosch Corporation, 345 E. Grand Ave., South San Francisco, California 94080 has submitted an application (Appendix A) requesting an exemption from the prohibitions of Section 27156 of the Motor Vehicle Code for the "Robert Bosch Transistorized Ignition System (TCI-h)", manufactured by Robert Bosch GmbH, Germany. The device is to be installed on 1972 through 1976 model year 4 cylinder vehicles equipped with a Bosch distributor using a standard Kettering ignition system. These vehicles include Audi, Ford, Mercedes, Opel, Porsche, Volkswagen, and Saab. The complete list of make and model of vehicles and the applicable "TCI-h" systems are summarized in Appendix B.

II. System Description

The "TCI-h" system is an inductive breakerless ignition system which uses the "Hall effect" principle to provide the ignition system signal. This device eliminates the need for breaker points within the distributor. The kit consists essentially of a electronic control box, ballast resistor, sensor switch, trigger wheel and a special high energy ignition coil equipped with a protective cap. Appendix D shows the exploded view of the device, and the electrical schematic.

The sensor switch is mounted on the distributor breaker plate and is connected electrically to the electronic control box which controls the flow of the primary current to the high energy ignition coil. The trigger wheel which is attached to the distributor rotor is mounted onto the distributor drive shaft. It has four vanes that interrupt the magnetic field as each vane enters the air gap within the sensor switch.

The sensor switch consists basically of a Hall Cell and an Alnico permanent magnet. The magnetic field passes through an air gap within the sensor switch to the Hall Cell. When the trigger wheel vane is in the air gap the magnetic field is diverted through the vane and bypasses the Hall Cell. When the trigger wheel vane leaves the air gap the Hall Cell becomes saturated with magnetic field and generates voltage. This output signal voltage is transferred to the electronic control box which controls the current flow to the primary side of the ignition coil, and causes the spark plug to fire.

III. System Evaluation

The ARB staff's evaluation of the Robert Bosch "TCI-h" Breakerless Ignition System for compliance with the Vehicle Code Section 27156 consisted of an engineering analysis, evaluation of laboratory bench test results submitted by the applicant and confirmatory bench tests by the ARB Laboratory to determine if the installation

of the device on a vehicle would adversely affect vehicle ignition system characteristics. Any significant degradation of the OEM ignition system performance characteristics is considered to have an adverse effect on the vehicle's exhaust emission control system.

A. Engineering Analysis

Breakerless ignition systems using the "Hall effect" principle have been previously evaluated by the Air Resources Board.[1] Any possible adverse effects of this type of ignition system modification is usually indicated by effects on the ignition timing advance and spark energy. Other problems associated with the use of the device are compatibility with capacitive discharge ignition systems, and electronic fuel injection systems.

The manufacturer stated that the device meets the 80 volts and 70 micro seconds duration minimum impulse requirements of the Robert Bosch L-Jetronic injection system.[2] The staff considers this explanation of compatibility acceptable. In addition the "TCI-h" system for the "VW Beetle" is designed to retain the

[1] Gulf & Western Breakerless Ignition System and Per Lux Breakerless Ignition System.

[2] Bosch Corporation letter to ARB dated March 9, 1977.

unequal timing interval requirement.[3] The manufacturer will also not recommend the installation of the device on vehicles equipped with a capacitive discharge or transistorized ignition system with breaker points.[4]

The "TCI-h" system includes a high energy ignition coil. Therefore it is unlikely that the spark energy will be reduced as a result of the device installation on the OEM ignition system.

A review of the device's applications showed that all the applicable Bosch distributors have concentric breaker plates. This configuration will not affect the vacuum advance of the OEM ignition system when the device is installed. Therefore the only change in the ignition timing that could occur would be in the centrifugal advance due to the inherent delay in the electronic system of the device. This can be determined by laboratory tests.

---

[3]Bosch Corporation letter to ARB dated March 25, 1977.

[4]Ibid 2.

B. Laboratory Tests

The applicant submitted back-to-back tests on the following distributors:

1. 1974 Audi 4 cylinder distributor
2. 1974 Ford Capri 4 cylinder distributor
3. 1974 California VW Beetle 4 cylinder distributor
4. 1974 Federal VW Beetle 4 cylinder distributor

ARB performed confirmatory tests on a 1974 Audi 4 cylinder distributor. All the above tests were performed on an ignition system simulator in accordance with the "ARB Guidelines for Testing and Criteria for Emission Compliance of Ignition System Modifications". The device was installed according to the manufacturers installation instructions shown in Appendix C. Table I through V inclusive are the summary of the test data.

A review of all the ignition test data showed that the installation of the device on the applicable distributors did not significantly change the ignition timing advance. The use of a high energy ignition coil, however, resulted in an increase of up to 80% in spark energy and a 40% increase in secondary voltage. However, the maximum voltage was less than 30kv. These increases are not considered adverse. ARB pass/fail

criteria allows no more than 20% degradation in spark energy. Secondary voltage increase not exceeding 30kv is not considered excessive and will not put undue strain to the ignition system. In addition no significant deterioration was detected on other ignition system parameters such as spark duration and rise time.

IV. Manufacturer's Claims

The applicant claims the installation of the device will provide the following benefits to the user:

1. Up to 40% more ignition voltage over the entire rotational speed range.
2. Better starting in conditions of extreme heat or cold, thus less demand on battery.
3. Less environmentally harmful exhaust gases.
4. Sure ignition even with sooted spark plugs.

The laboratory test results on several distributor applications showed consistent improvement of the spark energy when the device was installed on the OEM ignition system. It is the staff's judgement that the above claims, except for item No. 3, can be achieved due to the use of high energy coil. The manufacturer agreed to delete the anti-pollution claims[5] as required under Section 43644 of the Health and Safety Code.

[5]Bosch Corporation letter to ARB dated March 9, 1977.

V. Conclusion and Recommendation

The ARB staff's engineering evaluation of the "Robert Bosch Breakerless Transistorized Ignition System (TCI-h) indicates that the use of this system as a retrofit device in place of breaker points ignition system for the Robert Bosch distributors will not have any adverse effect on the OEM ignition system performance characteristics.

Therefore the staff recommends that Robert Bosch Corporation be issued an exemption from the prohibitions of Vehicle Code Section 27156 for its "Robert Bosch Breakerless Transistorized Ignition System for installation on 1972 through 1976 model year 4 cylinder vehicles equipped with a Bosch distributor using a standard Kettering ignition system. The device is not recommended for installation in conjunction with capacitive discharge and transistorized ignition systems equipped with breaker points.

Table 1 - Robert Bosch Corporation "TCI-h" Ignition System Data Summary for 1974 Audi 4 Cylinder Distributor (Applicant's Test Data)

A. Centrifugal Spark Advance in Crankshaft Degrees

Engine RPM	Baseline	Device
1200	0	0
2000	14	14.4
2800	21.4	21.0
3400	23.8	22.8
4000	25.0	25.0

B. Vacuum Spark Advance in Crankshaft Degrees

Vaccum in. Hg.	Baseline	Device
3	0	0
6	0	0
9	0	0
15	6.4	6.4
20	6.4	6.4

C. Spark Duration in Microseconds

Engine RPM	Baseline	Device
600	2200	1800
3000	1900	1500

D. Secondary Voltage Rise Time in Microseconds

Engine RPM	Baseline	Device
600	60	80
3000	35	40

E. Spark Energy in Millijoules

Engine RPM	Baseline	Device
600	50	72
3000	32.7	45.6

F. Available Secondary Voltage in Killovolts (simulating fouled spark plug)

Engine RPM	Baseline	Device
600	18	17
3000	22.5	20

G. Available Secondary Voltage in Killovolts (with load)

Engine RPM	Baseline	Device
600	25	23
3000	27.5	24

Table II - Robert Bosch Corporation "TCI-h" Ignition System Data Summary for 1974 Ford Capri 4 Cylinder Distributor (Applicant's Test Data)

A. Centrifugal Spark Advance in Crankshaft Degrees

Engine RPM	Baseline	Device
1200	3.6	4
2000	13.8	13.8
2800	16.8	16.4
3400	19.8	19.0
4000	22.8	21.2

B. Vacuum Spark Advance in Crankshaft Degrees

Vacuum in. Hg.	Baseline	Device
3	0	0
6	0	0
9	2.8	2.8
15	6.0	6.0
20	6.0	6.0

C. Spark Duration in Microseconds

Engine RPM	Baseline	Device
600	2000	1800
3000	1800	1500

D. Secondary Voltage Rise Time in Microseconds

Engine RPM	Baseline	Device
600	40	35
3000	80	40

E. Spark Energy in Millijoules

Engine RPM	Baseline	Device
600	44	72
3000	30	45.6

F. Available Secondary Voltage in Killovolts (simulating fouled spark plug)

Engine RPM	Baseline	Device
600	20	22.5
3000	15	20

G. Available Secondary Voltage in Killovolts (with load)

Engine RPM	Baseline	Device
600	25	27.5
3000	23	24

Table III - Robert Bosch Corporation "TCI-h" Ignition System Data Summary for California 1974 Volkswagen Beetle 4 Cylinder Distributor (Applicant's Test Data)

A. Centrifugal Spark Advance in Crankshaft Degrees

Engine RPM	Baseline	Device
1200	3.0	3.8
2000	12.8	11.4
2800	17.2	16.0
3400	20.8	20.0
4000	23.2	22.0

B. Vacuum Spark Advance in Crankshaft Degrees

Vacuum in. Hg.	Baseline	Device
3	0	0
6	0	0
9	3.6	3.6
15	6.4	6.4
20	6.4	6.4

C. Spark Duration in Microseconds

Engine RPM	Baseline	Device
600	1400	1800
3000	1150	1500

D. Secondary Voltage Rise Time in Microseconds

Engine RPM	Baseline	Device
600	50	35
3000	45	40

E. Spark Energy in Millijoules

Engine RPM	Baseline	Device
600	37	72
3000	25.3	45.6

F. Available Secondary Voltage in Killovolts (simulating fouled spark plug)

Engine RPM	Baseline	Device
600	20	22.5
3000	17	24

G. Available Secondary Voltage in Killovolts (with load)

Engine RPM	Baseline	Device
600	25	27.5
3000	23	24

Table IV - Robert Bosch Corporation "TCI-h" Ignition System Data Summary for Federal 1974 Volkswagen Beetle 4 Cylinder Distributor (Applicant's Test Data)

A. Centrifugal Spark Advance in Crankshaft Degrees

Engine RPM	Baseline	Device
1200	1.2	1.2
2000	12.6	12
2800	17.8	17.8
3400	21.4	21.4
4000	21.4	21.4

B. Vacuum Spark Advance in Crankshaft Degrees

Vacuum in. Hg.	Baseline	Device
3	0	0
6	0	0
9	2.2	2.6
15	6.4	6.4
20	6.4	6.4

C. Spark Duration in Microseconds

Engine RPM	Baseline	Device
600	2200	1800
3000	1600	1500

D. Secondary Voltage Rise Time in Microseconds

Engine RPM	Baseline	Device
600	45	35
3000	100	40

E. Spark Energy in Millijoules

Engine RPM	Baseline	Device
600	39.6	72
3000	32.2	45.6

F. Available Secondary Voltage in Killovolts (simulating fouled spark plug)

Engine RPM	Baseline	Device
600	21	22.5
3000	16.5	24

G. Available Secondary Voltage in Killovolts (with load)

Engine RPM	Baseline	Device
600	26.5	27.5
3000	25	24

Table V - Robert Bosch Corporation "TCI-h" Ignition System Data Summary for 1974 Audi 4 Cylinder Distributor (ARB Confirmatory Test)

A. Centrifugal Spark Advance in Crankshaft Degrees

Engine RPM	Baseline	Device
1200	0	0
2000	14	14
2800	20	20
3400	23	22
4000	25	25

B. Vacuum Spark Advance in Crankshaft Degrees

Vacuum in. Hg.	Baseline	Device
6	0	0
9	0	0
12	6	6
15	6	6
20	6	6

C. Spark Duration in Microseconds

Engine RPM	Baseline	Device
600	2200	2200
4000	1900	1640

D. Secondary Voltage Rise Time in Microseconds

Engine RPM	Baseline	Device
600	120	50
4000	100	50

E. Spark Energy in Millijoules

Engine RPM	Baseline	Device
600	39.6	63.5
4000	25.5	42.0

F. Available Secondary Voltage in Killovolts (simulating fouled spark plug)

Engine RPM	Baseline	Device
600	17	22
4000	14	19

G. Available Secondary Voltage in Killovolts (with load)

Engine RPM	Baseline	Device
600	24	26
4000	22	22

Appendix A

Kenny

ROBERT BOSCH CORPORATION

BOSCH
GERMANY

Subsidiary of Robert Bosch GmbH

Mr. K. D. Drachand, Chief
Engineering Branch
Air Resources Board Laboratory
9528 Telstar Avenue
El Monte, Ca. 91731

SOUTH SAN FRANCISCO, CALIFORNIA

January 5, 1977

Dear Mr. Drachand:

We refer to your letter of 9-21-1976 regarding the Robert Bosch breakerless ignition device and our discussion of the matter with Dick Kenny.

We would like to apply for an exemption from the prohibitions of Motor Vehicle Code Section 27156 and are enclosing data in compliance with paragraph IIB of the "Air Resources Board Criteria for Determining Compliance with Section 27156 of the Vehicle Code."

The enclosed materials consist of:

1. A description of the Robert Bosch Breakerless Transistorized Coil Ignition System (TCI-h) with a list of vehicles for which conversion kits are available.

2. A set of installation instructions.

3. Comparison Measurements on four different vehicles with the vehicles' original ignition system as baseline.

If - after evaluation of this data you should require a sample system - we can supply this in short order.

Robert Bosch would like to be able to offer this system on the American market in March 1977.

Because of the short lead-time we would appreciate it very much if you could handle this matter as soon as possible.

Best regards,

ROBERT BOSCH CORPORATION
South San Francisco

H Linssen
Harry Linssen

HL/em

Encls.
cc:ASV-B.Greenwood
AET-D.Richter

345 East Grand Ave., South San Francisco, California 94080 • Telephone: (415) 871-4550 • Cable: ROBOSPARK, SOUTHSANFRANCISCO • TELEX 34-9407
Headquarters: Chicago • Regional Offices: Houston • New York
and BOSCH Products are manufactured by Robert Bosch GmbH • Stuttgart • Germany

BOSCH

Install. Instr. with application

Appendix B

Kontaktlose Zündanlage (TSZ-h)

Breakerless ignition system (TCI-h)

Système d'allumage sans rupteur (TSZ-h)

Kontaktlös tändanläggning (TSZ-h)

Sistema d'accensione senza ruttore (TSZ-h)

Verwendungsübersicht / Summary of applications / Tableau d'utilisation / Användningsöversikt / Sommario d'utilizzazione

Fahrzeug-Typ / Vehicle type / Type de véhicule / Fordonstyp / Tipo di veicolo		Baujahr / Year of manufacture / Année de fabrication / Tillverkningsår / Anno di costruzione	Eingebauter Zündverteiler / Ignition distributor installed / Allumeur monté / Monterad fördelare / Spinterogeno montato: Bosch-Nr. / Bosch Part No. / Référence Bosch / Bosch-beställningsnr. / Nr. d'ordinazione Bosch	Fahrzeughersteller-Nr. / Vehicle manufacturer Part No. / Référence fabricant du véhicule / Fordonstillverkarens reservdelsnummer / Nr. d'ordinazione costruttore del veicolo	TSZ-h-Bestell-Nr. / TCI-h Part No. / Référence TSZ-h / TSZ-h beställningsnr. / Nr. d'ordinazione TSZ-h
ALFA-ROMEO					
Alfasud, Alfasud Ti		10.74–	0 231 168 014	530 163	0 227 100 906
AUDI					
60, 75		11.71–09.72	0 231 170 016	059 905 205 G	0 227 100 901
80	1,3 ltr. 55 PS	07.72–	0 231 170 021	056 905 205	0 227 100 901
80	1,5 ltr. 75/85 PS	07.72–07.75	0 231 170 022	056 905 205 A	0 227 100 901
80	1,6 ltr. 75/85 PS	08.75–	0 231 176 070	049 905 205 D	0 227 100 901
80 GT		10.73–07.75	0 231 170 139	049 905 205	0 227 100 901
80 GTE		09.75–	0 231 181 0[illegible]8	049 905 205 E	0 227 100 906
100	1,6 ltr. 85 PS	01.75–07.75	0 231 170 139	049 905 205	0 227 100 901
		08.75–	0 231 176 070	049 905 205 D	0 227 100 901
100	1,8 ltr. 85 PS	12.71–07.74	0 231 170 016	059 905 205 G	0 227 100 901
100	1,8 ltr. 100 PS	12.71–08.74	0 231 170 017	059 905 205 F	0 227 100 901
		09.74–07.76	0 231 170 016	059 905 205 G	0 227 100 901
100	1,9 ltr. 112 PS	11.71–07.76	0 231 176 013	059 905 205 H	0 227 100 901
100 Coupé S		11.71–07.76	0 231 176 013	059 905 205 H	0 227 100 901
USA-Ausführungen[1])					
Fox Kalifornien[2])	1,5 ltr.	12.73–08.74	0 231 176 049 ✓	056 905 205 C	0 227 100 901
Fox	1,6 ltr. K-Jetronic 80 C	09.74–	0 231 176 037 ✓	049 905 205 A	0 227 100 901
90 Super		09.71–12.71	0 231 176 014		0 227 100 901
100		01.74–07.74	0 231 176 032	058 905 205 A	0 227 100 901
100	K-Jetronic	10.75–	0 231 [illegible]	058 905 205 C	0 227 100 901
100 Automatik	K-Jetronic 100 C	08.74–	0 231 [illegible] 022 ✓	058 905 205 A	0 227 100 901
AUSTIN-MINI					
Clubman		01.70–02.76	0 231 [illegible]	–	0 227 100 904
Estate		01.70–02.76	0 231 [illegible]	–	0 227 100 904
Mini 850		01.70–02.76	0 231 [illegible]	–	0 227 100 904
Mini 1000		01.70–02.76	0 231 [illegible]	–	0 227 100 904
BMW					
316		08.75–	[illegible]	12 11 1 360 692	0 227 100 906
318		08.75–[illegible]	[illegible]	12 11 1 360 692	0 227 100 906
		10.75–	[illegible]	12 11 1 360 693	0 227 100 906
320		08.75–	[illegible]	12 11 1 360 693	0 227 100 906
518 (Superbenzin)		07.74–07.75	0 231 180 004	12 11 1 355 270	0 227 100 907
520		07.73–09.75	[illegible]	12 11 1 357 899	0 227 100 902
520	Kugelfischer-Einspritz.[4])	07.73–09.75	[illegible] 009	12 11 1 357 169	0 227 100 908
1600, 1602, Touring		09.71–07.75	0 231 180 004	12 11 1 355 270	0 227 100 907
1800, 1802 Touring		09.71–07.75	[illegible] 180 004	12 11 1 355 270	0 227 100 907

Fahrzeug-Typ Vehicle type Type de véhicule Fordonstyp Tipo di veicolo		Baujahr Year of manufacture Année de fabrication Tillverkningsår Anno di costruzione	Eingebauter Zündverteiler Ignition distributor installed Allumeur monté Monterad fördelare Spinterogeno montato Bosch-Nr. Bosch Part No. Référence Bosch Bosch-beställningsnr. Nr. d'ordinazione Bosch	Fahrzeug-hersteller-Nr. Vehicle manufacturer Part No. Référence fabricant du véhicule Fordonstillverkarens reservdelsnummer Nr. d'ordinazione costruttore del veicolo	TSZ-h-Bestell-Nr. TCI-h Part No. Référence TSZ-h TSZ-h beställningsnr. Nr. d'ordinazione TSZ-h
FORD (USA)					
Pinto	OHC 2,0 ltr. HC	10.72–04.73	0 231 170 018/118	73 HF 12 100 AA	0 227 100 901
		05.73–08.74	0 231 170 099/100	74 HF 12 100 EA	0 227 100 901
Pinto Automatik	OHC 2,0 ltr. HC	10.72–04.73	0 231 170 019/119	73 HF 12 100 GA	0 227 100 901
		05.73–08.74	0 231 170 107/108	74 HF 12 100 LA	0 227 100 901
HANOMAG-HENSCHEL					
F 20, F 25	Mot. Austin A 70	03.73–02.74	0 231 170 080	603 150 00 13	0 227 100 904
F 30, F 35	Mot. Austin A 70	03.73–02.74	0 231 170 080	603 150 00 13	0 227 100 904
MERDEDES-BENZ					
200	Mot. M 115	12.72–03.74	0 231 170 081	–	0 227 100 901
		04.74–	0 231 170 138	002 158 02 01	0 227 100 901
220	Mot. M 115 [7]	12.72–07.73	0 231 170 081	–	0 227 100 901
	Mot. M 115 Abgasentgiftg.	12.72–07.73	0 231 176 016	001 158 82 01	0 227 100 901
230	Mot. M 115 KV 23	02.76–	0 231 170 138	002 158 02 01	0 227 100 901
230.4	Mot. M 115	08.73–	0 231 170 137	001 158 98 01	0 227 100 901
	Mot. M 115 KV 23	08.73–	0 231 170 138	002 158 02 01	0 227 100 901
230.4 Schweden [5]	Mot. M 115 KV 23	08.75–	0 231 170 190	002 158 22 01	0 227 100 901
L 207, L 307	Motor Austin A 70	03.73–	0 231 170 080	603 150 00 13	0 227 100 904
L 408 G, LF 408 G	75/80 PS	11.72–03.74	0 231 170 081	–	0 227 100 901
		04.74–12.74	0 231 170 138	002 158 02 01	0 227 100 901
L 409, LK 409	90 PS	01.75–	0 231 170 116	002 158 06 01	0 227 100 901
O 309 B	75/85 PS	11.72–03.74	0 231 170 081	–	0 227 100 901
		04.74–12.74	0 231 170 138	002 158 02 01	0 227 100 901
O 309 B	90 PS	01.75–	0 231 170 116	002 158 06 01	0 227 100 901
NSU					
1000, 1000 C		01.72–01.73	0 231 170 001		0 227 100 901
1200, 1200 C		01.72–01.73	0 231 170 001		0 227 100 901
OPEL					
Ascona-A 1,2	1,2 ltr. 60 PS	01.73–12.74	0 231 170 012	12 11 027	0 227 100 903
		04.72–12.74	0 231 170 204	12 11 062	0 227 100 903
Ascona-A 1,6	1,6 ltr. 68 PS	09.72–12.74	0 231 170 011	12 11 019	0 227 100 901
		09.70–12.74	0 231 170 205	12 11 063	0 227 100 901
		01.75–08.75	0 231 170 153	12 11 040	0 227 100 901
	1,6 ltr. 80 PS	01.72–12.74	0 231 170 008	12 11 020	0 227 100 901
		09.70–12.74	0 231 170 205	12 11 063	0 227 100 901
		01.75–08.75	0 231 170 147	12 11 042	0 227 100 901
Ascona-A 1,9	1,9 ltr. 90 PS	01.72–12.74	0 231 170 008	12 11 020	0 227 100 901
		09.70–12.74	0 231 170 205	12 11 063	0 227 100 901
		01.75–08.75	0 231 170 147	12 11 042	0 227 100 901
Ascona-A 1,9 USA	1,9 ltr.-S	06.72–08.75	0 231 176 012	12 11 028	0 227 100 901
Ascona-B 1,2	1,2 ltr. 60 PS	09.75–	0 231 170 159	12 11 046	0 227 100 903
Ascona-B 1,6	1,6 ltr. 60 PS	09.75–	0 231 170 153	12 11 040	0 227 100 901
	1,6 ltr. 75 PS	09.75–	0 231 170 147	12 11 042	0 227 100 901
Ascona-B 1,9	1,9 ltr.-S	09.75–	0 231 170 188	12 11 053	0 227 100 901
Blitz 1,9	1,9 ltr.-T	05.72–01.75	0 231 170 014	12 11 021	0 227 100 901
GT	1,9 ltr. 90 PS	11.71–08.73	0 231 170 008	12 11 020	0 227 100 901
		06.70–08.73	[illegible]	12 11 063	0 227 100 901
Kadett-B 1100	1,1 ltr. 50 PS	01.73–08.73	[illegible]	12 11 027	0 227 100 903
		08.71–08.73	[illegible] 170 204	12 11 062	0 227 100 903

Fahrzeug-Typ Vehicle type Type de véhicule Fordonstyp Tipo di veicolo		Baujahr Year of manufacture Année de fabrication Tillverkningsår Anno di costruzione	Eingebauter Zündverteiler Ignition distributor installed Allumeur monté Monterad fördelare Spinterogeno montato Bosch-Nr. Bosch Part No. Référence Bosch Bosch-beställningsnr. Nr. d'ordinazione Bosch	Fahrzeug-hersteller-Nr. Vehicle manufacturer Part No. Référence fabricant du véhicule Fordonstillverkarens reservdelsnummer Nr. d'ordinazione costruttore del veicolo	TSZ-h-Bestell-Nr. TCI-h Part No. Référence TSZ-h TSZ-h beställningsnr. Nr. d'ordinazione TSZ-h
OPEL					
Kadett-B 1200	1,2 ltr. 60 PS	01.73–08.73	0 231 170 012	12 11 027	0 227 100 903
		08.71–08.73	0 231 170 204	12 11 062	0 227 100 903
Kadett-B 1700	1,7 ltr. 75 PS	06.70–07.71	0 231 170 205	12 11 063	0 227 100 901
Kadett-B Rallye	1,9 ltr. 90 PS	06.70–07.71	0 231 170 205	12 11 063	0 227 100 901
Kadett-B Rallye USA	1,9 ltr.-S	06.72–08.73	0 231 176 012	12 11 028	0 227 100 901
Kadett-C 1000	1,0 ltr. 40 PS	01.75–	0 231 170 159	12 11 046	0 227 100 903
	1,0 ltr. 48 PS	01.75–08.75	0 231 170 160	12 11 049	0 227 100 903
Kadett-C 1200	1,2 ltr. 52 PS	08.73–12.74	0 231 170 012	12 11 027	0 227 100 903
		08.73–12.74	0 231 170 204	12 11 062	0 227 100 903
		01.75–	0 231 170 160	12 11 049	0 227 100 903
	1,2 ltr. 60 PS	08.73–12.74	0 231 170 012	12 11 027	0 227 100 903
		08.73–12.74	0 231 170 204	12 11 062	0 227 100 903
		01.75–	0 231 170 159	12 11 046	0 227 100 903
Kadett-C GT/E	1,9 ltr.	09.75–	0 231 170 154	12 11 047	0 227 100 901
Manta-A 1,2	1,2 ltr. 60 PS	01.73–12.74	0 231 170 012	12 11 027	0 227 100 903
		04.72–12.74	0 231 170 204	12 11 062	0 227 100 903
Manta-A 1,6	1,6 ltr. 68 PS	09.72–12.74	0 231 170 011	12 11 019	0 227 100 901
		09.70–12.74	0 231 170 205	12 11 063	0 227 100 901
		01.75–08.75	0 231 170 153	12 11 040	0 227 100 901
	1,6 ltr. 80 PS	01.72–12.74	0 231 170 008	12 11 020	0 227 100 901
		09.70–12.74	0 231 170 205	12 11 063	0 227 100 901
		01.75–08.75	0 231 170 147	12 11 042	0 227 100 901
Manta-A 1,9	1,9 ltr. 90 PS	01.72–12.74	0 231 170 008	12 11 020	0 227 100 901
		09.70–12.74	0 231 170 205	12 11 063	0 227 100 901
		01.75–08.75	0 231 170 147	12 11 042	0 227 100 901
Manta-A GT/E	1,9 ltr.	01.75–	0 231 170 154	12 11 047	0 227 100 901
Manta-A USA	1,9 ltr.-S	06.72–08.75	0 231 176 012	12 11 028	0 227 100 901
Manta-B 1,2	1,2 ltr. 60 PS	09.75–	0 231 170 159	12 11 046	0 227 100 903
Manta-B 1,6	1,6 ltr. 60 PS	09.75–	0 231 170 153	12 11 040	0 227 100 901
	1,6 ltr. 75 PS	09.75–	0 231 170 147	12 11 042	0 227 100 901
Manta-B 1,9	1,9 ltr.-S	09.75–	0 231 170 188	12 11 053	0 227 100 901
Manta-B GT/E	1,9 ltr.	01.75–	0 231 170 154	12 11 047	0 227 100 901
Olympia-A	1,7 ltr. 75 PS	06.70–10.70	0 231 170 205	12 11 063	0 227 100 901
	1,9 ltr. 90 PS	06.70–10.70	0 231 170 205	12 11 063	0 227 100 901
Rekord-C 1500	1,5 ltr. 58 PS	05.70–12.71	0 231 170 205	12 11 063	0 227 100 901
Rekord-C 1700	1,7 ltr. 75 PS	05.70–12.71	0 231 170 205	12 11 063	0 227 100 901
Rekord-C 1900	1,9 ltr. 90 PS	05.70–12.71	0 231 170 205	12 11 063	0 227 100 901
Rekord-D 1700	1,7 ltr. 60 PS	03.75–	0 231 170 153	12 11 040	0 227 100 901
	1,7 ltr. 66 PS	09.72–12.74	0 231 170 011	12 11 019	0 227 100 901
		01.75–02.75	0 231 170 153	12 11 040	0 227 100 901
	1,7 ltr. 83 PS	01.72–04.72	0 231 170 205	12 11 063	0 227 100 901
		05.72–02.75	0 231 170 039	12 11 029	0 227 100 901
Rekord-D 1900	1,9 ltr. 75 PS	03.75–	0 231 170 153	12 11 040	0 227 100 901
	1,9 ltr.-SH 90 PS	03.75–	0 231 170 146	12 11 043	0 227 100 901
	1,9 ltr.-SH 97 PS	01.75–02.75	0 231 170 146	12 11 043	0 227 100 901
Rekord-D 2000	2,0 ltr.-S	09.75–	0 231 170 188	12 11 053	0 227 100 901
PORSCHE					
912 E USA		09.75–	0 231 176 [illegible]	–	0 227 100 901
924		01.76–	0 231 [illegible]	–	0 227 100 901

Fahrzeug-Typ Vehicle type Type de véhicule Fordonstyp Tipo di veicolo		Baujahr Year of manufacture Année de fabrication Tillverkningsår Anno di costruzione	Eingebauter Zündverteiler Ignition distributor installed Allumeur monté Monterad fördelare Spinterogeno montato Bosch-Nr. Bosch Part No. Référence Bosch Bosch-beställningsnr. Nr. d'ordinazione Bosch	Fahrzeug-hersteller-Nr. Vehicle manufacturer Part No. Référence fabricant du véhicule Fordonstillverkarens reservdelsnummer Nr. d'ordinazione costruttore del veicolo	TSZ-h-Bestell-Nr. TCI-h Part No. Référence TSZ-h TSZ-h beställningsnr. Nr. d'ordinazione TSZ-h
BMW					
2000		05.71–04.73	0 231 180 005	12 11 1 355 271	0 227 100 907
2002		05.71–07.75	0 231 180 005	12 11 1 355 271	0 227 100 907
2002 Automatik		08.73–07.75	0 231 180 008	12 11 1 354 611	0 227 100 902
2002 Tii		07.73–07.75	0 231 151 009	12 11 1 357 169	0 227 100 908
2002 Touring		05.73–07.75	0 231 180 005	12 11 1 355 271	0 227 100 907
2002 Turbo		01.74–07.75	0 231 180 014	12 11 1 356 336	0 227 100 902
USA-Ausführungen[1])					
2000 Touring		09.71–04.73	0 231 180 003	12 11 1 355 272	0 227 100 907
2000 Tii Touring		08.73–07.75	0 231 180 013	12 11 1 357 771	0 227 100 902
2002		09.71–05.72	0 231 180 003	12 11 1 355 272	0 227 100 907
		06.72–10.74	0 231 180 008	12 11 1 354 611	0 227 100 902
FORD					
Capri	OHC 1,6 ltr. HC	09.73–01.74	0 231 170 113/114	73 HF 12 100 LA	0 227 100 901
Capri GT	OHC 1,6 ltr. HC/GT	09.72–02.73	0 231 170 105	72 HF 12 100 NA	0 227 100 901
		03.73–01.74	0 231 170 091/092	73 HF 12 100 JA	0 227 100 901
Capri II 1,6	OHC 1,6 ltr. HC	02.74–08.75	0 231 170 113/114	73 HF 12 100 LA	0 227 100 901
		09.75–	0 231 170 174/175	76 HF 12 100 HA	0 227 100 901
Capri II 1,6	OHC 1,6 ltr. LC	06.74–08.75	0 231 170 149/150	74 HF 12 100 NA	0 227 100 901
		09.75–	0 231 170 176/177	76 HF 12 100 FA	0 227 100 901
Capri II 1,6 Schweden[5])	OHC 1,6 ltr. LC	09.75–	0 231 170 199/200	76 HF 12 100 JA	0 227 100 901
Capri II 1,6 GT	OHC 1,6 ltr. HC/GT	02.74–	0 231 170 091/092	73 HF 12 100 JA	0 227 100 901
Consul 1700	1,7 ltr. HC-V4	03.72–02.75	0 231 170 029/129	72 TF 12 100 ALA	0 227 100 903
	1,7 ltr. LC-V4	10.74–02.75	0 231 170 028/128	72 TF 12 100 AKA	0 227 100 903
Consul 2000	OHC 2,0 ltr. HC	03.72–02.73	0 231 170 105	72 HF 12 100 NA	0 227 100 901
		03.73–02.75	0 231 170 091/092	73 HF 12 100 JA	0 227 100 901
Consul 2000 Schweiz[6])	OHC 2,0 ltr. HC	03.72–01.73	0 231 170 030/130	72 HF 12 100 ACA	0 227 100 901
		02.73–02.75	0 231 170 089/090	73 HF 12 100 KA	0 227 100 901
Escort RS 2000	OHC 2,0 ltr. HC	07.73–12.74	0 231 170 091/092	73 HF 12 100 JA	0 227 100 901
Escort RS 2000 Schweiz[6])	OHC 2,0 ltr. HC	07.73–12.74	0 231 170 089/090	73 HF 12 100 KA	0 227 100 901
Granada 1700	1,7 ltr. HC-V 4	03.75–06.75	0 231 170 029/129	72 TF 12 100 ALA	0 227 100 903
		07.75–	0 231 170 178/179	76 ET 12 100 GA	0 227 100 903
	1,7 ltr. LC-V 4	03.75–08.75	0 231 170 028/128	72 TF 12 100 AKA	0 227 100 903
		09.75–	0 231 170 180/181	76 ET 12 100 HA	0 227 100 903
Granada 2000	OHC 2,0 ltr. HC	03.73–08.75	0 231 170 091/092	73 HF 12 100 JA	0 227 100 901
Granada 2000 Schweiz[6])	OHC 2,0 ltr. HC	03.73–08.75	0 231 170 089/090	73 HF 12 100 KA	0 227 100 901
Taunus 1300	OHC 1,3 ltr. HC	06.71–05.75	0 231 170 003/103	72 HF 12 100 TA	0 227 100 901
		06.75–08.75	0 231 170 169/170	76 HF 12 100 AA	0 227 100 901
	OHC 1,3 ltr. LC	06.71–	0 231 170 00[illegible]/102	72 HF 12 100 LB	0 227 100 901
Taunus 1600	OHC 1,6 ltr. HC	09.73–08.75	0 231 170 113/114	73 HF 12 100 LA	0 227 100 901
		09.75–	0 231 170 174/175	76 HF 12 100 HA	0 227 100 901
	OHC 1,6 ltr. HC/GT	06.71–02.73	0 231 170 105	72 HF 12 100 NA	0 227 100 901
	OHC 1,6 ltr. LC	10.74–08.75	0 231 170 149/150	74 HF 12 100 NA	0 227 100 901
		09.75–	0 231 170 176/177	76 HF 12 100 FA	0 227 100 901
Taunus 1600 Schweden[5])	OHC 1,6 ltr. LC	09.75–	0 231 170 199/200	76 HF 12 100 JA	0 227 100 901
Taunus 2000	OHC 2,0 ltr. HC 4 Zyl.	01.76–	0 231 170 1[illegible]/172	76 HF 12 100 CA	0 227 100 901
USA-Ausführungen[1])					
Capri 2000	OHC 2,0 ltr. HC	10.72–04.73	0 231 176 004/104	73 HF 12 100 CA	0 227 100 901
		05.73–04.74	0 231 176 037/038	74 HF 12 100 JA	0 227 100 901
Capri 2000 Automatic	OHC 2,0 ltr. HC	10.72–04.73	0 231 176 00[illegible]/105	73 HF 12 100 DA	0 227 100 901
		05.73–04.74	0 231 176 035/036	74 HF 12 100 CA	0 227 100 901

Fahrzeug-Typ Vehicle type Type de véhicule Fordonstyp Tipo di veicolo		Baujahr Year of manufacture Année de fabrication Tillverkningsår Anno di costruzione	Eingebauter Zündverteiler Ignition distributor installed Allumeur monté Monterad fördelare Spinterogeno montato Bosch-Nr. Bosch Part No. Référence Bosch Bosch-beställningsnr. Nr. d'ordinazione Bosch	Fahrzeug-hersteller-Nr. Vehicle manufacturer Part No. Référence fabricant du véhicule Fordonstillverkarens reservdelsnummer Nr. d'ordinazione costruttore del veicolo	TSZ-h-Bestell-Nr. TCI-h Part No. Référence TSZ-h TSZ-h beställningsnr. Nr. d'ordinazione TSZ-h
SAAB					
Sonett III	Ford-Mot. 1,5 ltr. HC-V 4	05.72–12.74	0 231 170 031/131	72 TF 12 100 AVA	0 227 100 903
95, 96	Ford-Mot. 1,5 ltr. HC-V 4	03.72–08.75	0 231 170 031/131	72 TF 12 100 AVA	0 227 100 903
		09.75–	0 231 170 182/183	76 TF 12 100 CA	0 227 100 903
95, 96 USA	Ford-Mot. 1,7 ltr. LC-V 4	07.72–12.73	0 231 176 010/110	886 120	0 227 100 903
99 L		06.72–05.74	0 231 170 115	835 60 32	0 227 100 909
99 Combi Coupé		08.73–05.74	0 231 170 115	835 60 32	0 227 100 909
		06.74–10.74	0 231 170 144	–	0 227 100 909
		11.74–04.76	0 231 170 145	835 85 33	0 227 100 909
		05.76–	0 231 170 197	836 231	0 227 100 909
99 EMS		05.73–07.74	0 231 179 001	835 487	0 227 100 909
		08.74–12.74	0 231 170 122	–	0 227 100 909
		01.75–04.76	0 231 170 158	835 8731	0 227 100 909
		05.76–	0 231 170 197	836 231	0 227 100 909
99 GL . .		01.76–04.76	0 231 170 145	835 8533	0 227 100 909
		05.76–	0 231 170 197	836 231	0 227 100 909
99 GL, EMS USA		01.76–04.76	0 231 170 145	835 8533	0 227 100 909
		05.76–	0 231 170 197	836 231	0 227 100 909
VOLVO					
142, 144, 145	Mot. B 20 A	05.74–07.74	0 231 170 085	462 657	0 227 100 904
	Mot. B 20 E	08.73–07.74	0 231 170 087	462 551	0 227 100 904
242, 244, 245	Mot. B 20 A	08.74–	0 231 170 085	462 657	0 227 100 904
	Mot. B 21 A	08.74–02.75	0 231 170 134	463 692	0 227 100 903
		03.75–07.75	0 231 170 173	12 19 625	0 227 100 903
		08.75–	0 231 170 185	12 19 661	0 227 100 903
VW-PORSCHE					
914 – 1.8	1,8 ltr.	09.73–08.74	0 231 168 009	022 905 205 T	0 227 100 905
914 – 1.8 USA	1,8 ltr.	11.73–07.74	0 231 181 009	022 905 205 AA	0 227 100 905
VOLKSWAGEN					
Golf	1,5 ltr. 70 PS	06.74–07.75	0 231 170 120	055 905 205 A	0 227 100 901
		11.74–07.75	0 231 170 155	055 905 205 D	0 227 100 901
	1,6 ltr. 75 PS	08.75–	0 231 176 070	049 905 205 D	0 227 100 901
Golf GTI		06.76–	0 231 181 018	049 905 205 E	0 227 100 906
K 70	75, 90, 100 PS	01.74–12.74	0 231 170 132	028 905 205 J	0 227 100 901
Käfer 1200	12 V 34 PS	08.74–07.75	0 231 170 034	043 905 205	0 227 100 910
		08.75–	0 231 170 18[illegible]	043 905 205 K	0 227 100 910
Käfer 1200 – 1,6 ltr.	1,6 ltr. 50 PS	08.75–	0 231 170 186	043 905 205 K	0 227 100 910
Käfer 1200 Automatik		08.75–	0 231 170 036	043 905 205 A	0 227 100 910
Käfer 1200, 1300, 1302, 1303	1,3 ltr. 44 PS	06.73–07.75	0 231 170 034	043 905 205	0 227 100 910
Käfer 1200, 1300, 1302, 1303 Automatik	1,3 ltr. 44 PS	06.73–07.75	0 231 170 036	043 905 205 A	0 227 100 910
Käfer 1303 A	1,2 ltr. 34 PS	08.73–07.75	0 231 170 034	043 905 205	0 227 100 910
Käfer 1302 S, LS, Karmann Ghia 1600	1,6 ltr. 50 PS	06.73–01.74	0 231 170 034	043 905 205	0 227 100 910
Käfer 1302 S, LS, Karmann Ghia 1600 Autom.	1,6 ltr. 50 PS	06.73–01.74	0 231 170 036	043 905 205 A	0 227 100 910
Käfer 1303 S, LS	1,6 ltr. 50 PS	06.73–07.75	0 231 170 034	043 905 205	0 227 100 910
		08.75–	0 231 170 186	043 905 205 K	0 227 100 910
Käfer 1303 S, LS Automatik	1,6 ltr. 50 PS	10.73–07.74	0 231 170 036	043 905 205 A	0 227 100 910

BOSCH

Einbauhinweise
Installation Instructions
Instructions de montage
Monteringsanvisning
Istruzioni di montaggio

Kontaktlose Transistorzündanlage (TSZ-h)
Breakerless transistorized ignition system (TCI-h)
Equipement d'allumage par bobine, transistorisé sans rupteur mécanique et sans entretien (TSZ-h)
Beröringsfritt transistortändsystem (TSZ-h)
Accensione a batteria con transistori senza ruttore meccanico TSZ-h

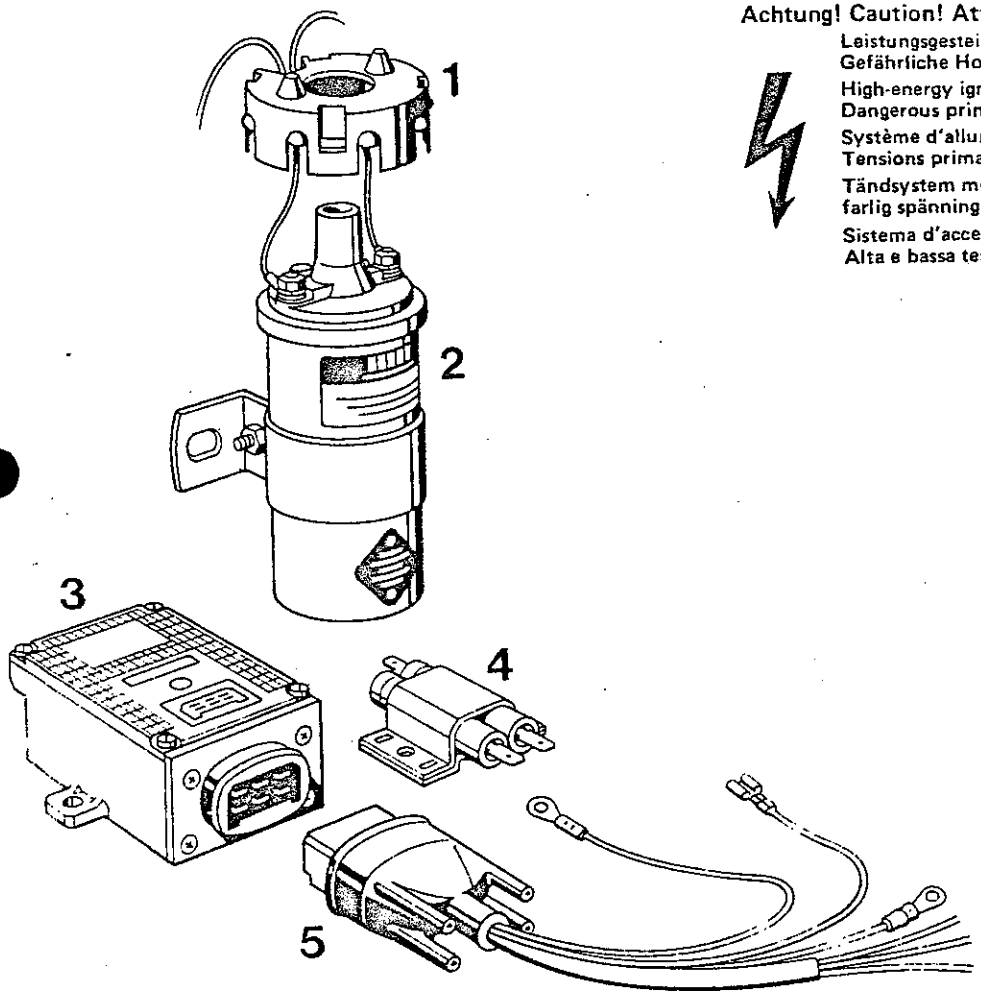

Achtung! Caution! Attention! Varning! Attenzione!

Leistungsgesteigertes Zündsystem.
Gefährliche Hoch- und Niederspannung.

High-energy ignition system.
Dangerous primary and secondary voltages.

Système d'allumage haute puissance.
Tensions primaire et secondaire dangereuses.

Tändsystem med hög tändeffekt —
farlig spänning i låg — och högspänningskrets!

Sistema d'accensione a potenza maggiorata.
Alta e bassa tensione. Pericolosa!

Bild

1 Berührungsschutz
2 Zündspule
3 Schaltgerät
4 Vorwiderstand
5 Mehrfachstecker

Fig. 1

1 = Electric-shock guard
2 = Ignition coil
3 = Trigger box
4 = Ballast resistor
5 = Multiple plug

Fig. 1

1 = Protection contre les contacts accidentels
2 = Bobine d'allumage
3 = Bloc electronique
4 = Résistance ballast
5 = Connecteur multiple

Bild 1

1 Beröringsskydd
2 Tändspole
3 Brytare
4 Förkopplingsmotstånd
5 Flerpolig stickpropp

Fig. 1

1 = Protezione anticontatto
2 = Bobina di accensione
3 = Centralina elettronica
4 = Resistore esterno
5 = Connettore multiplo

Diese Einbauhinweise sind unverbindlich. Wir empfehlen die Einbaumöglichkeiten zu prüfen.
These installation instructions are not binding. We recommend checking the fitting [illegible]
Ces instructions de montage ne sont données qu'à titre indicatif. Il est recommandé [illegible] les possibilités de montage
Denna monteringsanvisning gäller utan förbindelse. Vi rekommenderar att möjligheterna [illegible] montering först provas.
Queste istruzioni di montaggio sono solo a titolo indicativo, si raccomanda la verifica delle possibilità

Allgemein

Neue kontaktlose wartungsfreie Transistorzündanlage von Bosch.

Umbausatz für Fahrzeuge mit 4-Zylinder-Motor und Bosch-Zündverteiler zum Teil schon ab Modelljahr 72.

Problemloser Einbau — modernste Technik.

Berührungsloser Geber mit Hall-IC
- kein Kontaktverschleiß,
- präziser Zündzeitpunkt über Jahre,
- geringerer Benzinverbrauch.

Bosch-Leistungstransistoren Silizium-Technik
Bosch-Eigenentwicklung speziell fürs Kraftfahrzeug.
Hohe Zündleistung, niedriger Innenwiderstand
- bis 40 % mehr Zündspannung über den gesamten Drehzahlbereich,
- besseres Startverhalten bei Hitze und Kälte, dadurch Schonung der Batterie,
- weniger umweltschädliche Abgase,
- sicheres Zünden auch bei verrußten Zündkerzen.

hervorragend geeignet für alle Fahrbedingungen ob Kurzstrecke, Stadtfahrt oder große Strecke.

General

New, breakerless, maintenance-free, transistorized ignition system from Bosch.

For retrofitting in vehicles with 4-cylinder engines and a Bosch ignition system, in some cases for vehicles as far back as the 1972 model.

Problem-free installation — Most up-to-date technology

Hall-IC pulse generator without contacts
- No contact-point wear
- Ignition point remains exact for years
- Lower fuel consumption

Bosch power transistors — silicon technology
Bosch-developed especially for motor vehicles.
High ignition performance, low internal resistance
- up to 40 % more ignition voltage over the entire rotational-speed range
- better starting in conditions of extreme heat or cold, thus less demand on battery
- less environmentally-harmful exhaust gases
- sure ignition even with sooted spark plugs.

Outstanding under all driving conditions, regardless whether short or long trips or city driving.

Généralités

Nouvel équipement d'allumage Bosch par bobine, transistorisé sans rupteur mécanique et sans entretien.

Jeu de pièces d'adaptation pour véhicules à moteur à 4 cylindres équipés d'un allumeur Bosch, en partie déjà sur les modèles sortis depuis 1972.

Montage sans problèmes — Technique des plus modernes.

Générateur sans contact avec circuit intégré à effet Hall
- pas d'usure des contacts
- point d'allumage précis pendant des années
- consommation d'essence réduite

Transistors de puissance Bosch, technologie silicium
Produit mis au point par Bosch spécialement pour l'automobile.
Puissance d'allumage élevée, résistance interne basse
- jusqu'à 40 % de tension d'allumage en plus sur toute la gamme des vitesses de rotation
- meilleur comportement au démarrage par temps chaud et froid et donc ménagement de la batterie
- moins de gaz d'échappement nocifs à l'environnement
- allumage sûr, même quand les bougies sont recouvertes de suie.

convient parfaitement à toutes les conditions de circulation: courts trajets, circulation en ville ou longs trajets.

Allmänt

Nytt beröringsfritt underhållsfritt transistortändsystem från Bosch.

Som kompletteringsutrustning för fordon med 4-cylindermotorer och Bosch strömfördelare delvis redan fr. o. m. årsmodell 1972.

Problemlös montering — modernaste teknik.

Beröringsfri impulsgivare med Hall-IC
- inget kontaktslitage
- precis tändtidpunkt
- lägre bensinförbrukning

Bosch effekttransistorer silicium-teknik
Bosch egen utveckling, speciellt för motorfordon.
Hög tändeffekt, låg inre resistans
- upp till 40 % högre tändspänning över hela varvtalsområdet
- förbättrade startförhållanden vid värme och kyla, därmed skonas batteriet
- renare avgaser
- säker tändning, även om tändstiften sotar igen

utmärkt lämpat för alla trafiksituationer såväl korta sträckor, stadstrafik som långkörningar.

Generalità

Nuovo impianto d'accensione a transistori senza ruttore meccanico e senza manutenzione della Bosch.

Per il montaggio successivo su veicoli con motori a 4 cilindri ed accensione Bosch già a partire da alcuni modelli dell'anno 1972.

Montaggio senza problemi — Tecnica più moderna.

Captatore senza contatto con circuito integrato ad effetto Hall
- manca l'usura dei contatti del ruttore
- punto d'accensione esatto per molti anni
- consumo di carburante più basso

Tecnica dei transistori di potenza al silicio Bosch
Una realizzazione propria della Bosch, speciale per autoveicoli.
Elevata potenza d'accensione, bassa resistenza interna
- tensione d'accensione fino al 40 % più alta in tutto il campo di numero di giri
- migliore capacità di avviamento in caso di caldo e di freddo intenso. Di consequenza risparmio della batteria
- meno gas di scarico dannosi per l'ambiente naturale
- accensione sicura anche con candele imbrattate

Perfettamente idoneo per tutte le condizioni di marcia sia su brevi percorsi che in città o su lunghi percorsi.

Einbau

Batterie abklemmen.

Zündspule

Leitungen Kl. 1 (–) und 15 (+) lösen. Hochspannungsleitung Kl. 4 abziehen. Eingebaute Zündspule durch mitgelieferte Zündspule ersetzen.

Vorwiderstand

Einen eventuell vorhandenen Vorwiderstand ausbauen. Mitgelieferten Vorwiderstand unweit der Zündspule mit zwei Blechschrauben befestigen

Beachten: der Vorwiderstand kann auch als Widerstandskabel ausgelegt sein und muß stillgelegt werden.

Installation

Disconnect battery

Ignition coil

Disconnect leads at terminals 1 (–) and 15 (+).
Remove high-tension lead from terminal 4.
Substitute the ignition coil provided for the ignition coil installed.

Ballast resistor

If a ballast resistor is already fitted remove it and replace it with the resistor supplied with the ignition system. Fit close to the ignition coil, and secure with two self-tapping screws.

Note: the ballast resistor can be present in resistance-cable form. It must be disconnected.

Montage

Débrancher la batterie

Bobine d'allumage

Débrancher les câbles des bornes 1 (–) et 15 (+).
Retirer le câble haute tension de la borne 4.
Remplacer la bobine d'allumage existante par celle qui est livrée avec l'équipement d'allumage.

Résistance ballast

Le cas échéant, déposer la résistance ballast existante.

A l'aide de deux vis à tôle, monter la résistance ballast, comprise dans la livraison, à proximité de la bobine d'allumage.

Attention!

Une résistance ballast peut déjà exister aussi sous la

Montering

Koppla ifrån batteriet.

Tändspole

Lossa ledningarna vid uttagen 1 (–) och 15 (+).
Avlägsna högspänningsledningen från uttaget 4.
Ersätt den gamla tändspolen med den medlevererade tändspolen.

Förkopplingsmotstånd

Demontera eventuellt förekommande förkopplingsmotstånd.
Fäst medlevererade förkopplingsmotståndet med två plåtskruvar i närheten av tändspolen.

Observera: förkopplingsmotståndet kan även förekomma i form av motståndskabel och måste i så fall kopplas bort.

Montaggio

Sconnettere la batteria.

Bobina di accensione

Sconnettere i cavi ai morsetti 1 (–) e 15 (+).
Togliere il cavo d'alta tensione al morsetto 4.
Sostituire la bobina di accensione già montata con quella in dotazione

Resistore esterno

Smontare un eventuale resistore esterno, se c'è.
Fissare il resistore esterno in dotazione con due viti da lamiera vicino alla bobina d'accensione

Attenzione: il resistore esterno può anche essere realizzato come resistenza sotto forma di cavo e deve venire escluso

Schaltgerät

In Nähe der Zündspule Schaltgerät an ebener, kühler Karosseriefläche, Anschlüsse nach unten, mit 2 Blechschrauben befestigen. Schaltgerät so befestigen, daß zum Aufstecken des Mehrfachsteckers genügend Platz vorhanden ist.

Zündverteiler

Verteilerkappe (1) abheben, Verteilerläufer (2) und Staubschutzdeckel (3) entfernen. Unterbrecherkontakte (4) ausbauen.

Masseverbindung (Kupferlitze) von Unterbrecherplatte zum Verteilergehäuse an beiden Verbindungsstellen abschneiden und entfernen (siehe Bild 2).

Zündkondensator (5) abschrauben und mit Anschlußleitungen entfernen.

Geberleitungen der Magnetschranke durch die Öffnung im Zündverteiler nach außen führen und Formstück (6) so in die Öffnung drücken, daß **die drei dünnen Leitungen im unteren Teil des Formstücks liegen.**
Anschlußleitungen zur Magnetschranke nicht verdrehen.
Halteblech (7) in die Nut des Formstücks einführen und mit der **kürzeren mitgelieferten** Schraube festschrauben.
Magnetschranke (8) mit Fixierung (14) auf Unterbrecherplatte einrasten und mit der **längeren mitgelieferten** Schraube festschrauben.
Neuen Verteilerläufer (9) mit Rotorblende (10) auf Verteilerwelle stecken (einrasten).
Neuen Staubschutzdeckel (11) auf Verteilergehäuse (12) setzen (einrasten).
Verteilerkappe aufsetzen und Haltefedern (13) einhaken.
Isolierschlauch mit 6 mm Durchmesser über Geberleitungen der Magnetschranke schieben.

Trigger box

Fasten the trigger box in the vicinity of the ignition coil on a cool, flat, vehicle body surface and with the terminals facing downwards. Use 2 self-tapping screws.
When fitting the trigger box make sure that there is sufficient room to plug in the multiple plug.

Ignition distributor

Lift off the distributor cap (1).
Remove the distributor rotor (2) and dust-protection cover (3).
Remove distributor contact points (4).

Cut the ground connection (copper stranded wire) from the breaker-plate assembly to the distributor housing at both points of connection and remove it (see Fig. 2).

Unscrew ignition condensor (5) and remove together with connecting leads.

Feed the leads of the ignition vane switch through the opening in the distributor from the inside and press the shaped piece (6) into the opening. **The shaped piece should be so positioned that the three thin leads are in its lower half.**
Do not twist the leads to the vane switch. Slip the metal holder (7) into the groove in the shaped piece and screw in place with the short screw supplied. Snap the ignition vane switch (8) with locating piece (14) into the breaker-plate assembly and screw in place with the long screw provided.
Slip (snap in place) the new distributor rotor (9) with trigger wheel (10) onto the ignition-distributor shaft.
Place the new dust-protection cover (11) over the distributor housing (12) and snap into place.
Fit the distributor cap and secure with the spring clips (13).
Slip the insulating tubing (6 mm dia.) over the ignition vane switch leads.

Bloc électronique

Fixer le bloc électronique sur une surface plane de la carrosserie, à l'abri de la chaleur, à l'aide de deux vis à tôle, à proximité de la bobine d'allumage, les connexions dirigées vers le bas. Fixer le bloc électronique de sorte à disposer de suffisamment de place pour enficher le connecteur multiple.

Allumeur

Oter la tête du distributeur (1).
Retirer le rotor distributeur (2) et le couvercle antipoussière (3).
Démonter les contacts du rupteur (4).

Couper aux deux points de jonction le câble de masse (tresse de cuivre) raccordant le plateau du rupteur au boîtier de l'allumeur et le retirer (voir fig. 2).

Dévisser le condensateur d'allumage (5) et le retirer ainsi que les câbles de raccordement.

Conduire vers l'extérieur les câbles de générateur de la barrière magnétique en les faisant passer à travers l'ouverture de l'allumeur et presser la pièce moulée (6) dans l'ouverture de telle sorte que les 3 câbles minces reposent dans la partie inférieure de la pièce moulée.
Ne pas tordre les câbles de connexion qui conduisent à la barrière magnétique.
Introduire la tôle de fixation (7) dans l'encoche de la pièce moulée et la visser à fond à l'aide de la vis courte comprise dans la fourniture
Enclencher la barrière magnétique (8) avec sa fixation (14) sur le plateau du rupteur et la visser à fond en utilisant la vis longue comprise dans la fourniture.
Placer le nouveau rotor distributeur (9) et son tambour à fentes (10) sur l'arbre de l'allumeur (il y a une position d'arrêt).
Placer un nouveau couvercle antipoussière (11) sur le boîtier de l'allumeur (12) (il y a une position d'arrêt).
Monter la tête du distributeur et accrocher les ressorts de fixation (13).
Glisser la gaine isolante de 6 mm de diamètre sur les câbles de générateur de la barrière magnétique

Brytare

Skruva fast brytaren med två plåtskruvar på en plan och sval karosseriyta inte långt från tändspolen och med anslutningarna riktade nedåt. Fäst brytaren på sådant sätt att tillräcklig plats finns för anslutning av den flerpoliga stickproppen.

Strömfördelare

Lyft bort fördelarlocket (1), avlägsna fördelararmen (2) och det dammtäta skyddslocket (3).
Demontera avbrytarkontakterna (4).

Skär av godsförbindelsen (kopparflätan) mellan fördelarplattan och fördelarlådan vid båda anslutningsställena och ta bort den (se bild 2).

Skruva bort tändkondensatorn (5) tillsammans med dess anslutningsledningar.

För ut ledningarna från magnetbommen genom öppningen i fördelaren och pressa in gummipackningen (6) i öppningen på så sätt, att de tre tunna ledningarna vilar i packningens undre del.
Tvinna inte anslutningsledningarna till magnetbommen. Skjut in fästplåten (7) i gummipackningens skåra och skruva fast med den **kortare medlevererade** skruven.
Fixera magnetbommen (8) med hållaren (14) på fördelarplattan och fäst den med den **längre medlevererade** skruven.
Trä den nya fördelararmen (9) med rotorkåpan (10) över fördelaraxeln till fixeringsläget. Sätt på det nya dammskyddslocket (11) i fixerat läge på fördelarlådan (12).
Sätt på fördelarlocket och haka in spärrfjädrarna (13).
Trä på isoleringsslangen, diameter 6 mm, över magnetbommens utgående ledningar.

Centralina elettronica

Fissare la centralina elettronica su di una superficie piana e relativamente fredda della carrozzeria, vicino alla bobina d'accensione con due viti da lamiera con gli attacchi verso il basso.
Fissare la centralina elettronica in modo che ci sia spazio sufficiente per inserire il connettore multiplo.

Spinterogeno

Sollevare la calotta del distributore (1),
togliere la spazzola rotante (2) ed il coperchio parapolvere (3).
Smontare i contatti del rottore (4)
Tagliare e levare il collegamento a massa (cordoncino di rame), che va dalla piastra rottore al carter dello spinterogeno, nei due punti di collegamento. (Vedere figura 2).

Svitare il condensatore di accensione (5) e levarlo insieme ai cavi di collegamento.

Fare passare i cavi del captatore magnetico attraverso l'apertura dello spinterogeno, farli uscire fuori e premere il pezzo sagomato (6) nell'apertura in modo che i tre sottili conduttori si trovino nella parte inferiore del pezzo sagomato. Non storcere i cavi di collegamento del captatore magnetico. Introdurre la lamiera di fissaggio (7) nella scanalatura del pezzo sagomato e bloccare con la vite in dotazione più corta. Fare ingranare il captatore magnetico (8) con il fissaggio (14) sulla piastra rottore e bloccare avvitando con la vite in dotazione più lunga.
Innestare la nuova spazzola rotante (9) con schermo del rotore (10) sull'albero di comando dello spinterogeno.
Innestare il nuovo coperchio parapolvere (11) sul carter dello spinterogeno (12).
Mettere la calotta del distributore ed agganciare le molle di fermo (13).
Spingere il tubo isolatore con diametro di 6 mm sui conduttori del captatore magnetico.

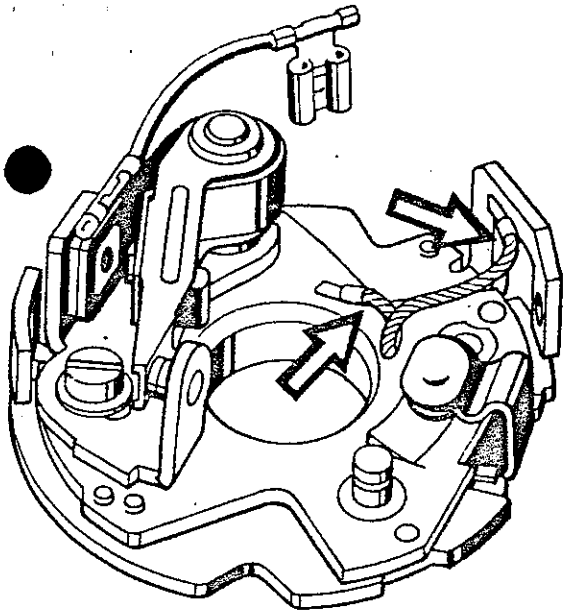

Fig. 2

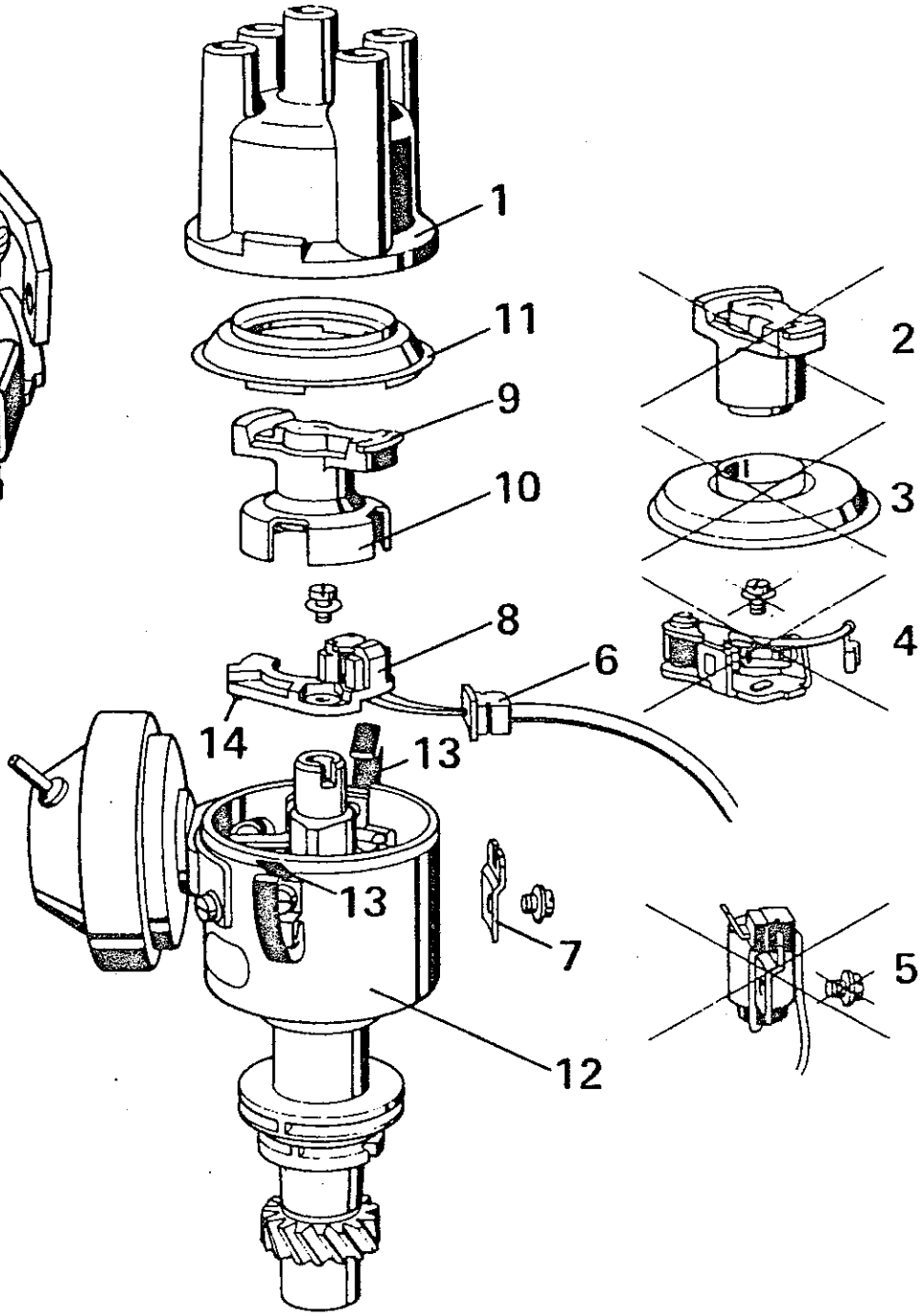

Bild 3

1 Verteilerkappe
2 = Verteilerläufer
3 = Staubschutzdeckel
4 = Unterbrecherkontakt
5 = Zündkondensator
6 = Formstück mit Geberleitungen
7 = Halteblech
8 = Magnetschranke
9 Verteilerläufer
10 = Rotorblende
11 = Staubschutzdeckel
12 Verteilergehäuse
Haltefeder
Fixierung
Teile entfallen

Fig. 3

1 = Distributor cap
2 = Distributor rotor
3 = Dust-protection cover
4 = Contact point
5 = Ignition condensor
6 = Shaped piece with leads
7 = Sheet metal holder
8 = Ignition vane switch
9 = Distributor rotor
10 = Trigger wheel
11 = Dust-protection cover
12 = Distributor housing
13 = Spring clip
14 = Locating piece
= Parts no longer required

Fig. 3

1 = Tête de distributeur
2 = Rotor distributeur
3 = Couvercle antipoussière
4 = Contact du rupteur
5 = Condensateur d'allumage
6 = Pièce moulée avec câbles de générateur
7 = Tôle de fixation
8 = Barrière magnétique
9 = Rotor distributeur
10 = Tambour à fentes
11 = Couvercle antipoussière
12 = Boîtier de l'allumeur
13 = Ressort de fixation
14 = Fixation
= Pièces supprimées

Bild 3

1 = Fördelarlock
2 = Fördelararm
3 = Dammtätt skyddslock
4 = Avbrytarkontakt
5 = Tändkondensator
6 = Gummipackning med utgående ledningar
7 Fästplåt
8 = Magnetbom
9 = Fördelararm
10 Rotorkåpa
11 = Dammskyddslock
12 = Fördelarlåda
13 Spärrfjädrer
14 = Hållare
Detarna bortfaller

Fig 3

1 Calotta del distributore
2 Spazzola rotante
3 Coperchio parapolvere
4 = Contatti del rottore
5 Condensatore di accensione
6 Pezzo sagomato con conduttori del captatore
7 Lamiera di fissaggio
8 = Captatore magnetico
9 = Spazzola rotante
10 = Schermo del rotore
11 = Coperchio parapolvere
12 = Carter dello spinterogeno
13 = Molla di fermo
14 Fissaggio
Mancano parti

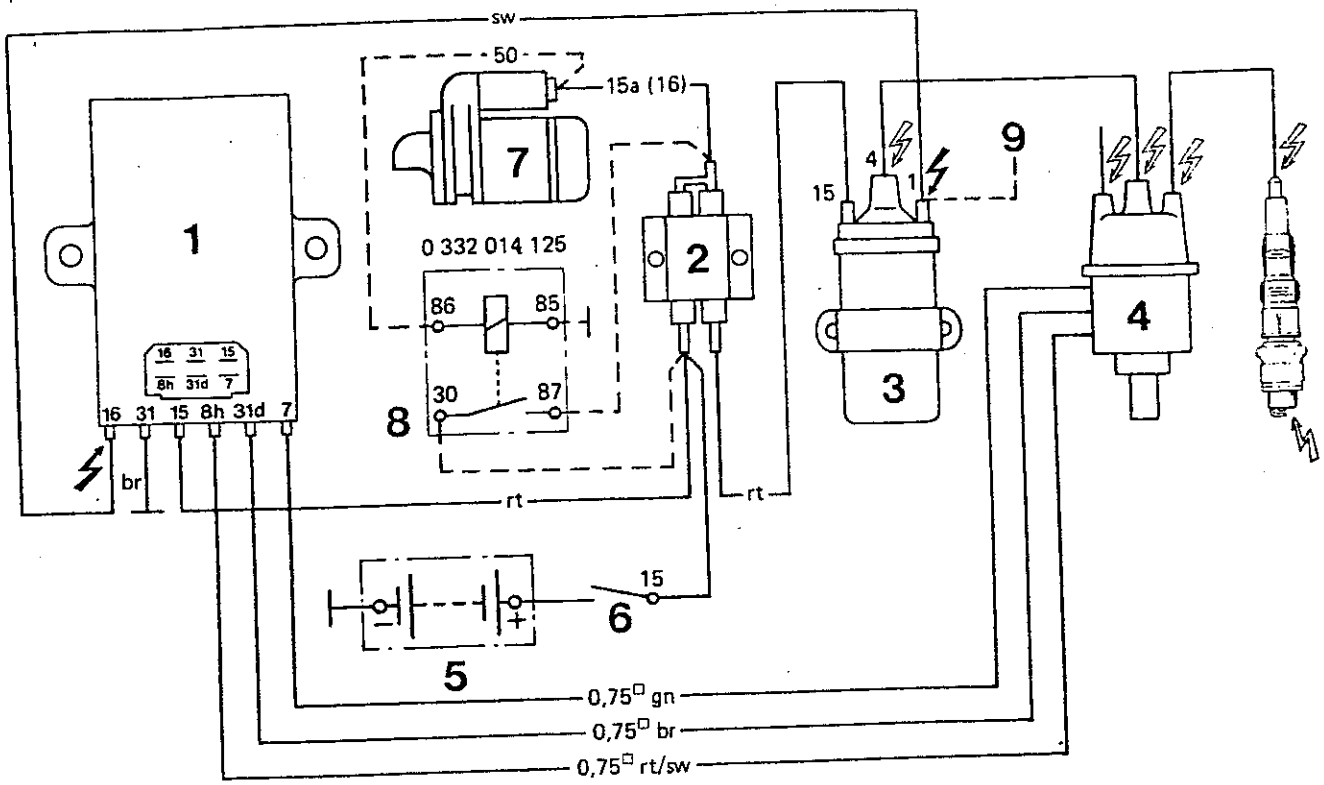

Schaltbild

1 = Schaltgerät
2 = Vorwiderstand
3 = Zündspule
4 = Zündverteiler
5 = Batterie
6 = Zündschalter
7 = Starter
8 = Relais – wird nur angeschlossen wenn Starter keine Kl. 15 a (16) hat.
9 = zum Drehzahlmesser

Wiring Diagram

1 = Trigger box
2 = Series resistor
3 = Ignition coil
4 = Ignition distributor
5 = Battery
6 = Ignition switch
7 = Starting motor
8 = Relay – to be connected only if starting motor has no terminal 15a (16).
9 = to Tachometer

Schéma de connexion

1 = Bloc électronique
2 = Résistance ballast
3 = Bobine d'allumage
4 = Allumeur
5 = Batterie
6 = Interrupteur d'allumage
7 = Démarreur
8 = Relais – n'est branché que si le démarreur ne possède pas de borne 15a (16).
9 = vers le compte-tours

Kopplingsschema

1 = brytare
2 = förkopplingsmotstånd
3 = tändspole
4 = strömfördelare
5 = batteri
6 = tändningsströmbrytare
7 = startmotor
8 = relä – ahsluts endast om startmotorn saknar uttag 15a (16).
9 = till takometer

Schema di collegamento

1 = Centralina elettronica
2 = Resistore esterno
3 = Bobina d'accensione
4 = Spinterogeno
5 = Batteria
6 = Interruttore d'accensione
7 = Motorino d'avviamento
8 = Relé – viene inserito solo quando il motorino di avviamento non ha il morsetto 15a (16).
9 = Al contagiri

ca. 400 V
ca. 25 kV

br = braun
gn = grün
rt = rot
sw = schwarz

approx 400 V
approx 25 kV

br = brown
gn = green
rt = red
sw = black

env. 400 V
env. 25 kV

br = brun
gn = vert
rt = rouge
sw = noir

cirka 400 V
cirka 25 kV

br = brun
gn = grön
rt = röd
sw = svart

circa 400 V
circa 25 kV

br = marrone
gn = verde
rt = rosso
sw = nero

Elektrischer Anschluß

Bei Fahrzeugen ohne Vorwiderstand oder bei denen ein Vorwiderstand ausgebaut wurde, kann die vorhandene Leitung als Stromzuführung (15) nach Schaltbild weiter verwendet werden. Wurde eine Widerstandsleitung (zur Zündspule Klemme 15) stillgelegt (siehe Abschnitt Einbau, Vorwiderstand) muß eine **neue, nicht abgesicherte,** durch den Zündschalter ge-

Electrical connection

In the case of vehicles fitted with an ignition coil without ballast resistor, or from which the ballast resistor was removed, the existing cable to terminal 15 of the ignition coil can still be used. If a resistance-cable (to ignition coil 15) was disconnected (see section dealing with installation, Ballast resistor), a new non-fused cable must be fitted which is switched

Raccordement électrique

Sur les véhicules avec bobine sans résistance ballast, ou sur lesquels une résistance ballast a été démontée, on peut encore utiliser le câble existant en tant que câble d'alimentation (15, – (voir le schéma de branchement). Au cas où un câble à résistance (vers la borne 15 de la bobine) aurait été supprimé (voir au § «Montage» – Résistance ballast),

Elanslutning

Vid fordon utan förkopplingsmotstånd eller vid vilka ett förkopplingsmotstånd har blivit demonterat kan den befintliga ledningen på nytt användas som strömtillförsel (15) enligt kopplingsschemat. Har en motståndskabel (till tändspolens uttag 15) blivit urkopplad (se avsnitt: Montering. Förkopplingsmotstånd) maste en **ny, ej avsäkrad ledning** installeras över tändningsströmbrytaren.

Collegamento elettrico

Nei veicoli senza resistore esterno o nei quali un resistore esterno è stato smontato, si può utilizzare il cavo presente come conduttore di corrente (15) secondo lo schema. Se è stato escluso un resistore sotto forma di conduttore (alla bobina d'accensione, morsetto 15), (vedere il paragrafo riguardante montaggio e resistore esterno), si deve installare un nuovo conduttore non

Leitungen zu Kl. 1 (–) und 15 (+) der Zündspule mit Kabelschuh versehen und vor dem Anschließen durch den Berührungsschutz ziehen.
Leitungen zum Mehrfachstecker durch Schutztülle ziehen und Flachstecker anquetschen.
Schaltgerät, Vorwiderstand und Zündspule nach Schaltbild anschließen.

Achtung! Bei Falschanschluß wird Magnetschranke bzw. Schaltgerät zerstört. Gute Masseverbindung von Klemme 31 Schaltgerät zur Fahrzeugmasse herstellen.
Hochspannungsleitungen von Zündspule zum Zündverteiler und vom Zündverteiler zu den Zündkerzen nicht mit anderen Leitungen zusammenfassen.

Berührungsschutz auf Zündspule aufsetzen.

Start-Spannungsanhebung

Während des Startens wird durch Klemme 15 a (16) des Starters ein Vorwiderstand (0,6 Ω) überbrückt. Hat der Starter keine Klemme 15 a (16), muß zusätzlich ein Relais (0 332 014 125) nach Schaltbild angeschlossen werden.

Batterie anschließen.

Zündzeitpunkt

Zündzeitpunkt nach Fahrzeug-Herstellervorschrift einstellen. Bei statischer Einstellung Prüflampe an Kl. 1 der Zündspule anschließen.

Entstörung

Besondere Entstörmaßnahmen sind nicht notwendig. Falls erforderlich kann an Klemme 15 der Zündspule ein Entstörkondensator von 2,2 µF (z. B. 0 290 800 074) angeschlossen werden.

Warn-Klebeschild

Klebeschild im Motorraum an gut sichtbarer, fett- und schmutzfreier Stelle anbringen.

leads to terminals 1 (–) and 15 (+) of the ignition coil and pull through the electric-shock guard before connecting.
Pull the leads to the multiple plug through its protective cap and crimp on the blade terminals.
Connect the trigger box, ballast resistor and ignition coil in accordance with the wiring diagram.

Caution! The ignition vane switch and/or the trigger box will be destroyed if the polarity is wrong.
Ensure good connection from terminal 31 of the trigger box to vehicle ground.
Do not bunch the high-tension leads from the ignition coil to the ignition distributor, and those from the ignition distributor to the spark plugs, together with other leads.

Fit the electric-shock guard on the ignition coil.

Voltage Increase for Starting

During starting the ballast resistor (0.6 Ω) is short-circuited via terminal 15 a (16) of the starting motor.
If the starting motor is not provided with terminal 15 a (16), a relay (0 332 014 125) must be fitted in addition according to the wiring diagram.

Reconnect battery

Ignition point

Set the ignition point in accordance with the vehicle manufacturer's specifications.
For static adjustment, test lamp to terminal 1 of the ignition coil.

Interference Suppression

Special interference-suppression measures are not required. If necessary a 2.2 µF suppression capacitor (e.g. 0 290 800 074) can be connected to terminal 15 of the ignition coil.

Sticker

Attach the sticker in the engine compartment at an easily visible, grease- and dirt-free location.

commutateur d'allumage.
A cet effet, utiliser le câble rouge compris dans la fourniture.
Munir de cosses les câbles arrivant aux bornes 1 (–) et 15 (+) de la bobine d'allumage et les faire passer à travers la protection contre les contacts accidentels, avant de les raccorder.
Faire passer les fils conduisant au connecteur multiple à travers le passe-câble protecteur et sertir la fiche plate.
Brancher le bloc électronique, la résistance ballast et la bobine d'allumage d'après le schéma de connexion.

Attention!
Toute erreur de branchement entraîne la destruction de la barrière magnétique et du bloc électronique.
Réaliser une bonne liaison à la masse de la borne 31 du bloc électronique à la masse du véhicule.

Ne pas réunir les autres câbles avec les câbles haute tension reliant la bobine d'allumage à l'allumeur et l'allumeur aux bougies.

Placer la protection contre les contacts accidentels sur la bobine d'allumage.

Elévation de tension au démarrage

Pendant le démarrage, la résistance ballast de 0,6 Ω est court-circuitée par l'intermédiaire de la borne 15a (16) du démarreur.
Si le démarreur ne possède pas de borne 15a (16), il faut alors prévoir un relais supplémentaire (0 332 014 125), suivant le schéma de connexion.

Rebrancher la batterie.

Point d'allumage

Régler le point d'allumage en suivant les instructions du constructeur du véhicule.
Lors du réglage statique, brancher la lampe de contrôle sur la borne 1 de la bobine d'allumage.

Antiparasitage

Il n'est pas nécessaire de prévoir des mesures d'antiparasitage particulières.
On peut brancher éventuellement un condensateur d'antiparasitage de 2,2 µF (p. ex. 0 290 800 074) à la borne 15 de la bobine d'allumage.

Etiquette adhésive «Danger»

Coller l'étiquette adhésive à un endroit bien visible du compartiment moteur, à l'abri de la graisse et de la poussière.

Förse ledningarna till tändspolens uttag 1 (–) och 15 (+) med kabelskor och dra dem före anslutningen genom beröringsskyddet.
Dra ledningarna till flerpoliga stickproppen genom skyddsbussningen och förse dem med flatstift.
Anslut brytare, förkopplingsmotstånd och tändspole enligt kopplingsschemat.

Observera: Vid fel anslutning förstörs magnetbommen resp brytaren. Ordna en tillfredsställande godsförbindelse mellan brytarens uttag 31 och chassiet.

Sära på högspänningsledningarna från tändspolen till strömfördelaren och från strömfördelaren till tändstiften och andra ledningar.

Sätt på beröringsskyddet på tändspolen.

Tändspänningsökning vid start

Under starten blir ett förkopplingsmotstånd (0,6 Ω) överkopplat genom startmotorns uttag 15a (16).
Saknar startmotorn uttag 15a (16) måste dessutom ett manöverrelä (0 332 014 125) anslutas enligt kopplingsschemat.

Anslut batteriet.

Tändningsmoment

Ställ in tändningsmomentet enligt biltillverkarens föreskrifter.
Vid statisk inställning ansluts provlampan till tändspolens uttag 1

Avstörning

Särskilda avstörningsåtgärder är inte nödvändiga. Om så fordras kan en avstörningskondensator på 2,2 µF (t. ex. 0 290 800 074) anslutas

Självhäftande varningsskylt

Sätt fast den självhäftande skylten inom motorrummet på väl synlig, fett- och smutsfri plats.

fattore d'accensione, usando il conduttore rosso fornito.
Munire i cavi per i morsetti 1 (–) e 15 (+) della bobina di accensione di capo corda e tirarli attraverso la protezione anticontatto prima di collegarli
Introdurre i cavi per il connettore multiplo nel passacavo di protezione e schiacciare le spine piatte.
Collegare la centralina elettronica, il resistore esterno e la bobina d'accensione secondo lo schema.

Attensione! In caso di connessione sbagliata dei poli, il captatore magnetico o la centralina elettronica vengono distrutti. Creare un buon collegamento a massa dal morsetto 31 della centralina elettronica alla massa del veicolo.

Non unire con altri cavi i cavi ad alta tensione, che vanno dalla bobina d'accensione allo spinterogeno e dallo spinterogeno alle candele.

Mettere la protezione anticontatto sulla bobina d'accensione.

Tensione maggiorata all'avviamento.

Durante l'avviamento viene cortocircuitato un resistore esterno (0,6 Ohm) attraverso il morsetto 15a (16) del motorino d'avviamento. Se il motorino d'avviamento non ha il morsetto 15a, si deve inserire un relé supplementare (0 332 014 125) secondo lo schema.

Connettere la batteria.

Punto d'accensione
Mettere in fase l'accensione secondo le norme della ditta automobilistica costruttrice.

Durante la regolazione statica collegare la lampada di controllo al morsetto 1 della bobina d'accensione.

Eliminazione dei disturbi

Per l'eliminazione dei disturbi non sono necessarie misure particolari. Se necessario si può collegare al morsetto 15 della bobina d'accensione un condensatore antidisturbi da 2,2 µF (ad esempio 0 290 800 074).

Etichetta adesiva d'avvertimento

Fissare l'etichetta adesiva nel vano motore in un punto ben visibile, senza grasso e pulito

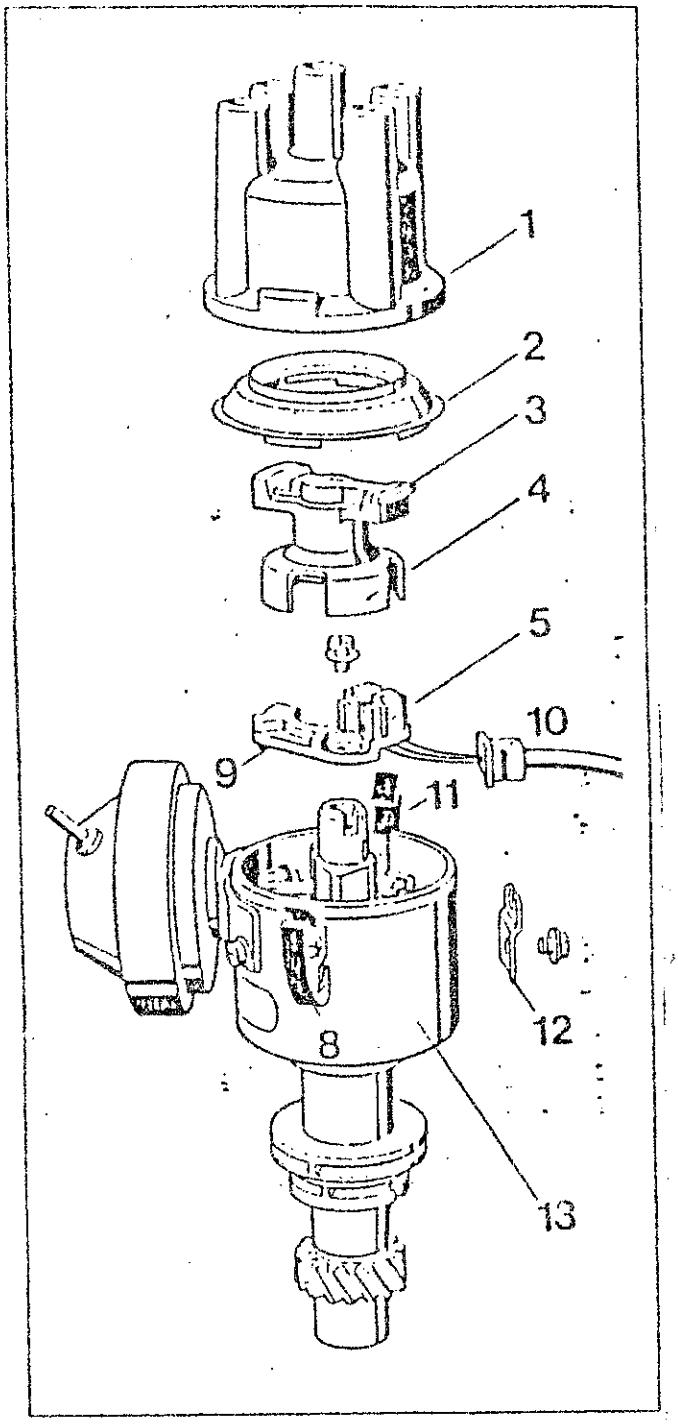

Figure 4 : Ignition distributor with Hall generator

1 = Distributor cap
2 = Dust protection cover
3 = Distributor rotor with
4 = Trigger wheel) Hall
5 = Ignition vane switch) generator
9 = Holder locating piece
10 = Shaped piece
11 = Spring clip
12 = Holding plate
13 = Distributor housing

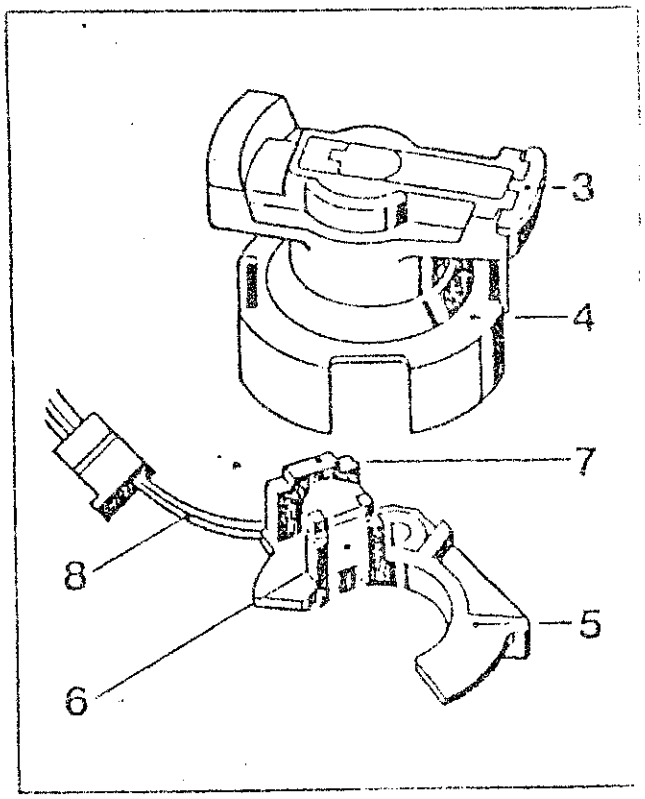

Figure 5 : Hall generator syst

3 = Distributor rotor with
4 = Trigger wheel
5 = Ignition vane switch
6 = Magnet
7 = Hall IC
8 = Pick-up leads

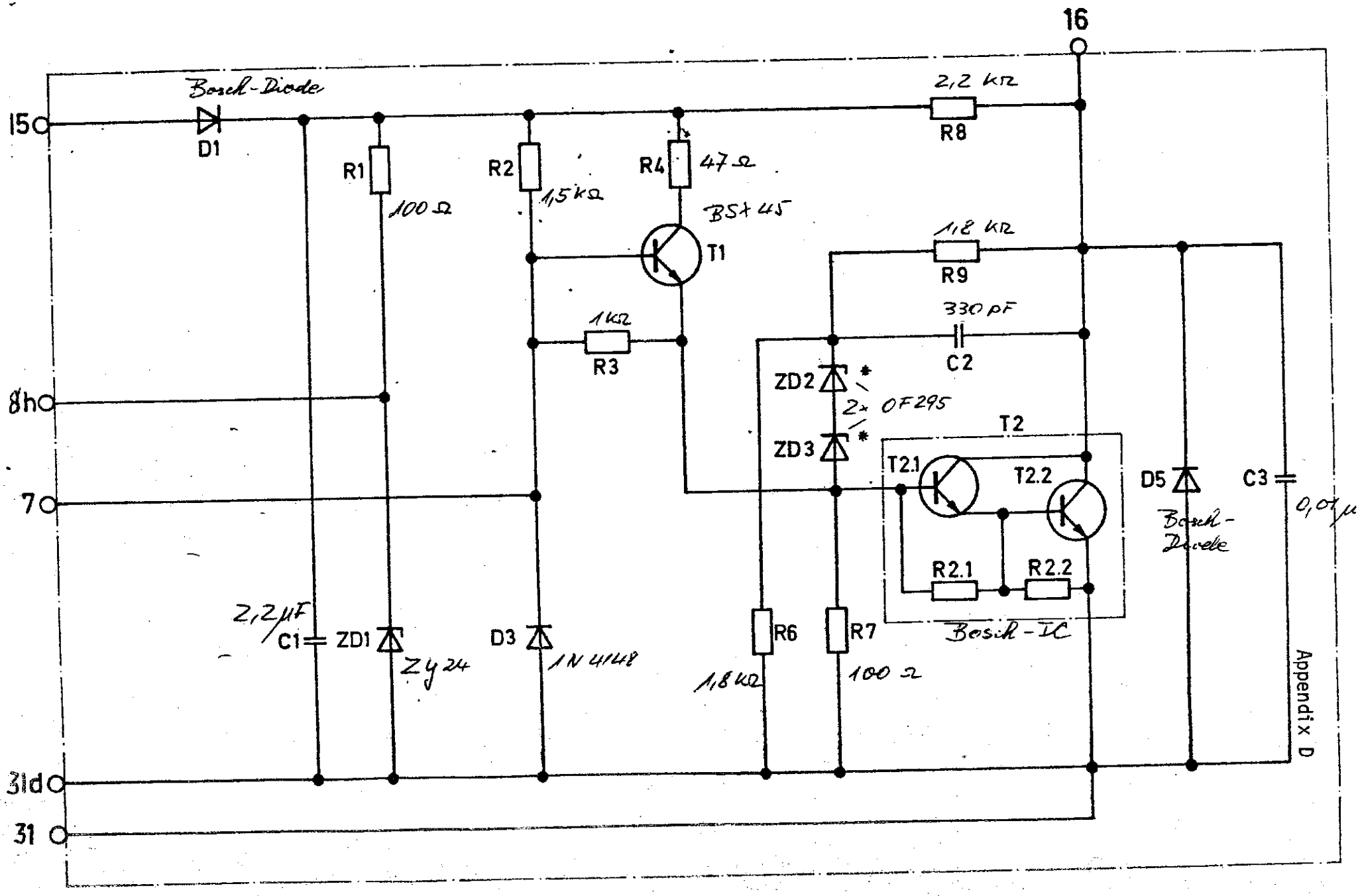
16
15
Bosch-Diode
D1
R1
100 Ω
R2
1,5 kΩ
R4
47 Ω
BSX 45
T1
2,2 kΩ
R8
1,8 kΩ
R9
330 pF
C2
1 kΩ
R3
ZD2
ZD3
2x OF295
T2
T2.1
T2.2
R2.1
R2.2
Bosch-IC
D5
Bosch-Diode
C3
0,01 µ
8h
7
31d
31
2,2 µF
C1
ZD1
Zy 24
D3
1N 4148
R6
1,8 kΩ
R7
100 Ω
Appendix D