State of California
AIR RESOURCES BOARD

EXECUTIVE ORDER D-99-1
Relating to Exemptions under Section 27156
of the Vehicle Code

TURBONETICS, INC.
TURBOTRONIC TURBOCHARGER SYSTEM
MODEL NO. 454 TCI-HD

Pursuant to the authority vested in the Air Resources Board by Section 27156 of the Vehicle Code; and

Pursuant to the authority vested in the undersigned by Sections 39515 and 39516 of the Health and Safety Code and Executive Order G-45-5;

IT IS ORDERED AND RESOLVED: That the installation of the Turbonetics Model No. 454 TCI-HD turbocharger system manufactured by Turbonetics, Inc., using an AiResearch T04B turbocharger with an A/R ratio of 1.30, has been found not to reduce the effectiveness of required motor vehicle pollution control devices and, therefore, is exempt from the prohibitions of Section 27156 of the Vehicle Code for 1987 and older Chevrolet/GMC 454 CID heavy-duty gasoline engines.

The following modifications to the original equipment emissions control system are permitted:

1) The carburetor bowl vent hose is disconnected from the carbon canister and that port on the carbon canister must be plugged.

2) The original air cleaner and heated air intake are replaced with the Airsensors air cleaner.

3) The vacuum hose routing is changed as specified in the device installation instructions.

4) The automatic choke system is removed along with the original equipment carburetor.

5) A 3-inch diameter exhaust system may be installed in place of the stock exhaust system.

This Executive Order is valid provided that installation instructions for this device will not recommend tuning the vehicle to specifications different from those submitted by the device manufacturer.

Changes made to the design or operating conditions of the device, as exempted by the Air Resources Board, that adversely affect the performance of a vehicle's pollution control system shall invalidate this Executive Order.

Marketing of this device using an identification other than that shown in this Executive Order or marketing of this device for an application other than those listed in this Executive Order shall be prohibited unless prior approval is obtained from the Air Resources Board. Exemption of a kit shall not be construed as an exemption to sell, offer for sale, or advertise any component of a kit as an individual device.

This Executive Order does not constitute any opinion as to the effect that the use of this device may have on any warranty either expressed or implied by the vehicle manufacturer.

THIS EXECUTIVE ORDER DOES NOT CONSTITUTE A CERTIFICATION, ACCREDITATION, APPROVAL, OR ANY OTHER TYPE OF ENDORSEMENT BY THE AIR RESOURCES BOARD OF ANY CLAIMS OF THE APPLICANT CONCERNING ANTI-POLLUTION BENEFITS OR ANY ALLEGED BENEFITS OF THE TURBONETICS MODEL NO. 454 TCI-HD TURBOCHARGER SYSTEM.

No claim of any kind, such as "Approved by Air Resources Board" may be made with respect to the action taken herein in any advertising or other oral or written communication.

Section 17500 of the Business and Professions Code makes untrue or misleading advertising unlawful, and Section 17534 makes violation punishable as a misdemeanor.

Section 43644 of the Health and Safety Code provides as follows:

> "43644. (a) No person shall install, sell, offer for sale, or advertise, or, except in an application to the state board for certification of a device, represent, any device as a motor vehicle pollution control device for use on any used motor vehicle unless that device has been certified by the state board. No person shall sell, offer for sale, advertise, or represent any motor vehicle pollution control device as a certified device which, in fact, is not a certified device. Any violation of this subdivision is a misdemeanor."

Any apparent violation of the conditions of this Executive Order will be submitted to the Attorney General of California for such action as he deems advisable.

Executed at El Monte, California, this 19th day of November, 1986.

K. D. Drachand, Chief
Mobile Source Division

State of California
AIR RESOURCES BOARD

EVALUATION OF THE TURBONETICS MODEL NO. 454 TCI-HD TURBOCHARGER SYSTEM FOR USE ON 1987 AND OLDER CHEVROLET/GMC 454 CID HEAVY-DUTY GASOLINE ENGINES FOR EXEMPTION FROM THE PROHIBITIONS OF VEHICLE CODE SECTION 27156 IN ACCORDANCE WITH SECTION 2222, TITLE 13 OF THE CALIFORNIA ADMINISTRATIVE CODE

November, 1986

EVALUATION OF THE TURBONETICS MODEL NO. 454 TCI-HD TURBOCHARGER SYSTEM FOR USE ON 1987 AND OLDER CHEVROLET/GMC 454 CID HEAVY-DUTY GASOLINE ENGINES FOR EXEMPTION FROM THE PROHIBITIONS OF VEHICLE CODE SECTION 27156 IN ACCORDANCE WITH SECTION 2222, TITLE 13 OF THE CALIFORNIA ADMINISTRATIVE CODE

by

Mobile Source Division
State of California
AIR RESOURCES BOARD
9528 Telstar Avenue
El Monte, CA 91731

(This report has been reviewed by the staff of the California Air Resources Board and approved for publication. Approval does not signify that the contents necessarily reflect the views and policies of the Air Resources Board, nor does mention of trade names or commercial products constitute endorsement or recommendation for use.)

SUMMARY

Turbonetics, Inc., of Van Nuys, California has applied for exemption of their Turbotronic turbocharger system Model No. 454 TCI-HD for use on 1987 and older Chevrolet/GMC 454 CID heavy-duty gasoline engines.

The Turbotronic system uses an AiResearch turbocharger and an Airsensors model N-8A-HD electronic fuel injection system to replace the original equipment manufacturer (OEM) normally aspirated carbureted induction systems found on 1987 and earlier Chevrolet/GMC 454 CID heavy-duty gasoline engines. The Airsensors model N-8A-HD electronic fuel injection system was previously exempted for use on the 1986 and older Chevrolet/GMC normally aspirated 454 CID heavy-duty gasoline engines under Executive Order D-163 in May, 1986.

Exhaust emissions test data show no significant increases in emissions when the 454 TCI-HD turbocharger kit is installed on the engines described above.

The applicant has submitted all the required information and based on the exhaust emission data and the staff evaluation, the staff recommends that the exemption be granted as requested.

CONTENTS

	Page Number
SUMMARY	i
CONTENTS	ii
I. INTRODUCTION	1
II. CONCLUSIONS	1
III. RECOMMENDATIONS	1
IV. DEVICE DESCRIPTION	1
V. DEVICE EVALUATION	3
VI. DISCUSSION	7
APPENDIX	
Installation Instructions	A-1
Prototype Identification Label	A-2
Turbocharger Test Program	A-3

State of California
AIR RESOURCES BOARD

EVALUATION OF THE TURBONETICS MODEL NO. 454 TCI-HD TURBOCHARGER SYSTEM FOR USE ON 1987 AND OLDER CHEVROLET/GMC 454 CID HEAVY-DUTY GASOLINE ENGINES FOR EXEMPTION FROM THE PROHIBITIONS OF VEHICLE CODE SECTION 27156 IN ACCORDANCE WITH SECTION 2222, TITLE 13 OF THE CALIFORNIA ADMINISTRATIVE CODE

I. INTRODUCTION

Turbonetics, Inc., of Van Nuys, California, 91402, has applied for an exemption for their Turbonetic turbocharger sytem Model No. 454 TCI-HD for use on 1987 and older Chevrolet/GMC 454 CID heavy-duty gasoline engines originally equipped with a Rochester 4-barrel carburetor. The system uses an AiResearch turbocharger and an Airsensors electronic fuel injection system to replace the OEM induction system.

II. CONCLUSION

The applicant has submitted all the required information and based on the submitted exhaust emissions test data, and the confirmatory test data generated at the Haagen-Smit Laboratory, the staff concludes that the replacement of the original equipment induction system with the Turbonetics model No. 454 TCI-HD turbocharger system will not adversely affect emissions.

III. RECOMMENDATION

The staff recommends that the exemption be granted as requested and that Executive Order No. D-99-1 be issued.

IV. DEVICE DESCRIPTION

The purpose of the Turbotronic turbocharger system is to increase the power output of the engine by increasing the volumetric efficiency of it by compressing the intake charge to pressures above that of the atmosphere. This

increased pressure allows a greater charge density to enter the combustion chamber providing more oxygen for combustion. Since fuel delivery is controlled by the Airsensors fuel injection system, which delivers fuel based on the intake air flow, the proper air-fuel ratios are maintained when the turbocharger is providing positive manifold pressure (boost).

The Turbonetics model No. 454 TCI-HD turbocharger system consists of a 1.30 A/R ratio AiResearch Model No. T04B turbocharger which blows through an Airsensors electronically controlled 4-barrel throttle-body fuel injector. The system comes complete with a turbocharger, wastegate, intake and exhaust tubing, hardware and a complete Airsensors model N-8A-HD electronic fuel injection system. Maximum positive manifold pressure is limited to 5 psig by a Turbonetics Delta Gate wastegate.

For details of the Airsensors fuel injection system please refer to the May, 1986, staff report entitled: "EVALUATION OF THE AIRSENSORS MODEL NO. N-8A-HD ELECTRONIC FUEL INJECTION SYSTEM FOR USE ON 1986 AND OLDER CHEVROLET/GMC 454 CID HEAVY-DUTY ENGINES FOR EXEMPTION FROM THE PROHIBITIONS OF VEHICLE CODE SECTION 27156 IN ACCORDANCE WITH SECTION 2222, TITLE 13, OF THE CALIFORNIA ADMINISTRATIVE CODE."

Since the installation of the Airsensors fuel injection system requires the removal of the OEM carburetor, some modifications to the OEM emission control system are required. They are:

1) The carburetor bowl vent hose is disconnected from the carbon canister and that port on the carbon canister must be plugged.

2) The original air cleaner and heated air intake are replaced with the Airsensors air cleaner.

3) The vacuum hose routing is changed as specified in the device installation instructions.

4) The automatic choke system is removed along with the orginal equipment carburetor.

In addition, to these modifications the original exhaust system is replaced with a 3-inch diameter exhaust system.

Installation instructions, which are included in each kit, show the kit installer how to properly install the system and reconnect the auxilliary emission control devices to the new fuel injection throttle body (see Appendix 1). A prototype of the system identification label is shown in Appendix 2.

V. DEVICE EVALUATION

In order to demonstrate compliance with the requirements for the exemption the applicant was required to perform back-to-back steady-state tests using the "Test Program for Add-On Turbocharger Systems for Heavy-Duty Engines" (see Appendix 3). The applicant performed the required tests at FCI International Testing Laboratories (FCI) in Santa Ana, California. The test vehicle used was a 1985 Fleetwood motorhome powered by the GMC 454 CID heavy-duty gasoline engine. The applicant requested that the 1986 and 1987 model-years be included in the exemption. Certification documents show that the 1986 and 1987 Chevrolet/GMC 454 CID engine family was carried over from 1985. Therefore, the 1985 Fleetwood motorhome was an acceptable test vehicle. The results of these tests are shown in Table 1.

Table 1

Exhaust Emissions
Turbonetics 454 TCI-HD
Turbocharger System for GMC Heavy Duty
454 CID Gasoline Engines

Test vehicle: 1985 Fleetwood Motor Home

MODE	HC (ppm)	CO(%)	NOx (ppm)
Baseline Idle	15	0.60	40
Device Idle	15	0.50	35
Baseline 20 mph	20	0.18	220
Device 20 mph	20	0.28	105

Table 1 (continued)

Exhaust Emissions
Turbonetics 454 TCI-HD
Turbocharger System for GMC Heavy Duty
454 CID Gasoline Engines

Test vehicle: 1985 Fleetwood Motor Home

MODE	HC (ppm)	CO(%)	NOx (ppm)
Baseline 30 mph	10	0.30	400
Device 30 mph	20	0.18	280
Baseline 40 mph	10	0.15	290
Device 40 mph	15	0.15	310
Baseline 50 mph	10	0.20	800
Device 50 mph	10	0.10	600
Baseline 55 mph	5	0.15	800
Device 55 mph	5	0.10	810

Confirmatory testing was performed at the Haagen-Smit Laboratory on the same test vehicle and the results are shown in Table 2.

Table 2

Exhaust Emissions
Turbonetics 454 TCI-HD
Turbocharger System for GMC Heavy Duty
454 CID Gasoline Engines

Test vehicle: 1985 Fleetwood Motor Home

MODE	HC (ppm)	CO(%)	NOx (ppm)
Baseline Idle	10	0.41	44
Device Idle	47	0.18	41
Baseline 20 mph	12	0.11	188
Device 20 mph	32	0.10	118
Baseline 30 mph	10	0.23	411
Device 30 mph	22	0.20	271
Baseline 40 mph	7	0.17	277
Device 40 mph	17	0.17	288

Table 2 (continued)

Exhaust Emissions
Turbonetics 454 TCI-HD
Turbocharger System for GMC Heavy Duty
454 CID Gasoline Engines

Test vehicle: 1985 Fleetwood Motor Home

MODE	HC (ppm)	CO(%)	NOx (ppm)
Baseline 50 mph	7	0.10	675
Device 50 mph	13	0.18	571
Baseline 55 mph	6	0.11	654
Device 55 mph	22	0.06	536

These results showed significant increases over baseline in HC emissions from the test vehicle in the turbocharged configuration. Therefore, Turbonetics was informed that the test results showed failure.

Turbonetics examined the test vehicle and found that a 3/8 ID vacuum line had broken off and was leaking. They concluded that this caused the high HC emissions problem. The leak was repaired and the vehicle was tested again at FCI. These results are shown in Table 3.

Table 3
Exhaust Emissions
Turbonetics 454 TCI-HD
Turbocharger System for GMC Heavy Duty
454 CID Gasoline Engines

Test vehicle: 1985 Fleetwood Motor Home

MODE	HC (ppm)	CO(%)	NOx (ppm)
Baseline Idle	15	0.60	40
Device Idle	17	0.50	40
Baseline 20 mph	20	0.18	220
Device 20 mph	20	0.28	200
Baseline 30 mph	10	0.30	400
Device 30 mph	15	0.25	350

Table 3 (continued)
Exhaust Emissions
Turbonetics 454 TCI-HD
Turbocharger System for GMC Heavy Duty
454 CID Gasoline Engines

Test vehicle: 1985 Fleetwood Motor Home

MODE	HC (ppm)	CO(%)	NOx (ppm)
Baseline 40 mph	10	0.15	290
Device 40 mph	15	0.20	320
Baseline 50 mph	10	0.20	800
Device 50 mph	15	0.10	550
Baseline 55 mph	5	0.15	800
Device 55 mph	15	0.15	600

Based on these results Turbonetics was granted a re-test at the Haagen-Smit Laboratory. The results of these tests are shown in Table 4.

Table 4
Exhaust Emissions
Turbonetics 454 TCI-HD
Turbocharger System for GMC Heavy Duty
454 CID Gasoline Engines

Test vehicle: 1985 Fleetwood Motor Home

MODE	HC (ppm)	CO(%)	NOx (ppm)
Baseline Idle	10	0.41	44
Device Idle	14	0.32	46
Baseline 20 mph	12	0.11	188
Device 20 mph	13	0.12	214
Baseline 30 mph	10	0.23	411
Device 30 mph	9	0.12	264
Baseline 40 mph	7	0.17	277
Device 40 mph	9	0.10	193
Baseline 50 mph	7	0.10	675
Device 50 mph	8	0.06	357
Baseline 55 mph	6	0.11	654
Device 55 mph	8	0.06	424

These results showed that the HC problem was solved by repairing the vacuum leak. The source of the vacuum leak was at the vacuum operated entry stairs to the motorhome. Since this accessory is an option and would not be found on most GMC heavy-duty engine applications the staff believes that the potential for this problem to occur on the vehicles that the Turbotronic system might be installed on is low.

VI. DISCUSSION

The exhaust emissions test data generated after the vacuum leak was repaired shows no significant increases in emissions. The largest increase was 4 ppm of HC at idle which has been determined to be below the sensitivity of the instruments and therefore, is not significant.

The system is a complete package with installation instructions to allow it to be properly installed by a qualified mechanic. It offers improved engine performance and vehicle driveability with no adverse emissions effect.

The applicant has submitted all the required information and demonstrated that the Turbotronic turbocharger system model 454 TCI-HD meets the criteria for an exemption. Therefore, the staff recommends that Turbonetics, Inc., be granted an exemption and that Executive Order D-99-1 be issued.

TURBONETICS MODEL 454TCI-HD

TURBOCHARGER SYSTEM

INSTALLATION INSTRUCTIONS

GENERAL: These instructions are to be used in conjunction with AirSensors, Inc. Installation Instructions and Technical Manual, Model 8A-HD Electronic Fuel Injection System. Except as noted in this procedure, the installation of the fuel injection portion of this kit is covered by the AirSensors manual.

DESCRIPTION: The TURBONETICS Model 454TCI-HD turbocharged-fuel injection system is intended specifically for application to Chevrolet/GMC 454 CID heavy-duty engines, 1986 model year and earlier. The system consists of an AirSensors Model 8A-HD Electronic Fuel Injection System in conjunction with a properly matched TURBONETICS turbocharger and related components as required to facilitate installation on the specified engine.

The purpose of this system is to provide for a more uniform computer controlled fuel-air mixing system which will result in overall engine performance improvement and as a power enhancement system to improve vehicle acceleration, hill-climbing speed and high altitude performance.

The combination of fuel injection and turbocharging is a marriage of two technologies that are ideally suited to each other. The mass-flow control of the injection system provides a fuel flow signal to the injectors that is totally independent of manifold pressure. This capability eliminates the need for awkward compensation devices and lengthy fuel paths which have plagued carbureted turbocharger systems in the past. The ability to introduce fuel into the engine at the original carburetor location in the form of a pressurized spray results in dramatically improved distribution with associated improvements in engine idle, acceleration, smoothness, and improved torque characteristics. (Refer to AirSensors' manual for a complete description of the fuel injection system.)

The turbocharger utilized in this system represents the results of many years of development and experience in selecting the proper combination of elements for the purpose intended. The compressor section is of the latest, most efficient design ever made available for this application. Proper selection of compressor inlet and discharge sizing is also significant to the performance of the system. The turbine selection has been carefully matched to provide smooth response while at the same time minimum restriction to the engine. The center section of the turbocharger is fitted with bronze, not aluminum bearings and is equipped with a water-jacket to assure long life and eliminate "coking".

The turbocharger system boost pressure is controlled by dual wastegates to assure positive control. The dual gates also provide a redundancy feature which prevents total loss of control should one gate fail. The control pressure is preset at 5 psi which relates to an approximate 40% power increase! The smooth transition from naturally aspirated to full boost as the throttle is depressed avoids any harsh power transients which could harm the engine.

Please read and follow the instructions in this manual carefully and the end result will be a performance improvement that will satisfy the most critical enthusiast.

TURBONETICS MODEL 454TCI-HD

TURBOCHARGER SYSTEM

INSTALLATION

(Refer to parts list and figures noted)

I. FUEL INJECTION SYSTEM: Install per AirSensors EFI Installation Instructions and Technical Manual, Model 8A-HD, enclosed.
(Note: Vacuum sensing line schematic requires modification as shown in Figure D).

II. TURBOCHARGER SYSTEM:

1. Locate vehicle on a level surface. Disconnect battery and set parking brake.

2. Remove entire exhaust system from exhaust manifold discharge connection to rear of vehicle.

3. Refer to Figure A for oil drain location. Remove oil pan, install oil drain fitting and re-install pan utilizing a new gasket and appropriate sealer.

4. Install turbocharger mounting flange on rear of right-hand (passenger side) cylinder head utilizing supplied hardware.

5. Install turbine discharge studs on turbine housing. Loosen bolts that secure both the turbine housing and the compressor housing to the turbocharger center housing to facilitate proper orientation.

6. Install turbocharger assembly on mounting flange utilizing a turbine discharge gasket on each side of the flange. Place turbine discharge tube assembly over studs and secure with provided locknuts.

7. Rotate turbocharger center section so that oil inlet is at the top. Secure turbine housing to center section bolts.

8. Attach oil drain flange to turbocharger utilizing the supplied gasket and fasteners with lockwashers. Refer to Water-jacket Installation Kit, 10553, and install per included instructions.

9. Install 5/8 hose x 3/8 MPT oil drain fitting in oil drain flange. Use teflon tape. Install 5/8 ID oil drain hose utilizing supplied clamps.

10. Install oil inlet elbow on turbocharger center section. Install 90° brass elbow in engine oil galley port above oil filter. Attach oil inlet line. Use teflon tape on all pipe threads.

11. Install turbine inlet tube assembly per attached Figure B. Install U-clamps where indicated. Install thermal shielding on section of tube passing under transmission.

CONTINUED

12. Following directions supplied with DeltaGate assemblies, install same in the locations indicated.

13. Final vehicle exhaust should be of 3" OD tubing. A full-flowing 3" inlet/outlet commercial truck muffler is suggested. Final vehicle exhaust is a customer responsibility.

14. Install throttle-body pressure plenum on throttle body with supplied gasket and mounting stud. Face inlet connection forward.

15. Install compressor discharge tube assembly as shown on Figure C. Rotate compressor housing as required to facilitate installation. Secure all clamps. Secure compressor housing fasteners.

16. Attach compressor inlet extension to compressor inlet utilizing supplied silicone coupling and band clamp. Orient diverter valve control circuit port to point up.

17. Connect compressor inlet extension to AirSensors' mass flow sensor unit utilizing supplied aluminized flex duct and clamps, brackets, etc., as required. (Customer supplied to suit specific vehicle.)

18. Refer to AirSensors' Installation Manual and connect all vacuum sensing/control lines as shown except for the diverter valve connection. Refer to Figure D for diverter valve connection schematic and attach accordingly.

19. Refer to Figure C for DeltaGate sensing line connection and fuel Pressure regulator sensing connection.

20. Install manifold pressure gauge per supplied instructions.

This completes the physical installation of the TURBONETICS Model 454TCI-HD turbocharger system. At this point, review all instructions and check all connections for secureness, then proceed with start-up instructions as specified in the AirSensors manual. Road test vehicle and correct any noted deficiencies. Note: boost pressure is controlled to 5 psi - do not exceed this value or engine damage may occur. Observe all vehicle manufacturer's recommendations for service and maintenance.

FIGURE A

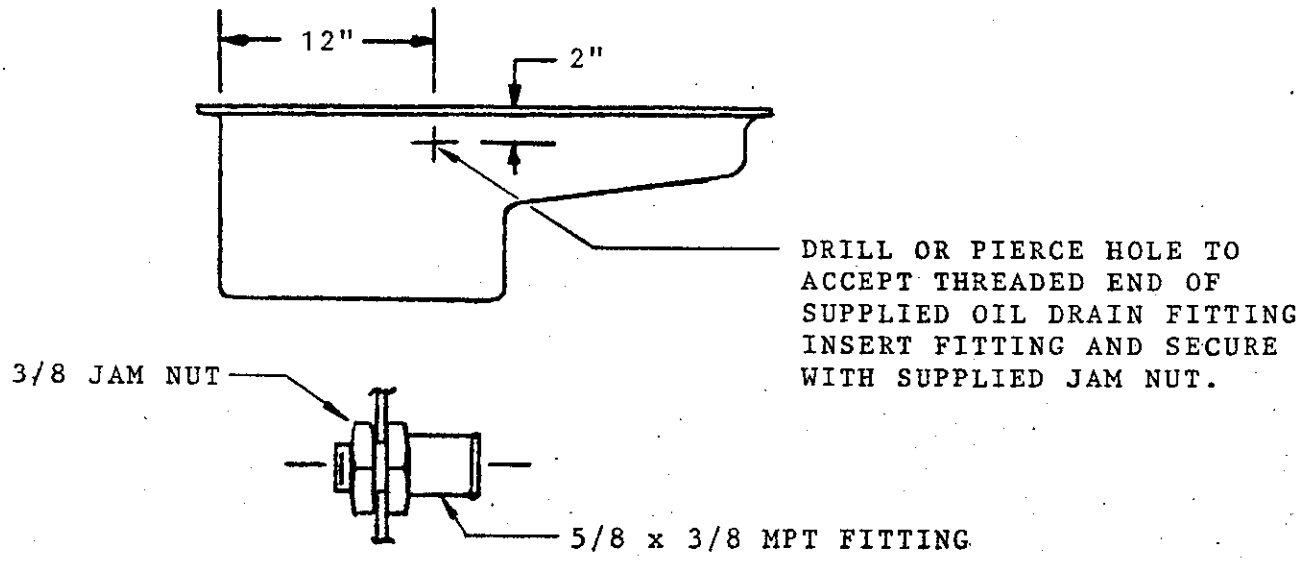

FIGURE B

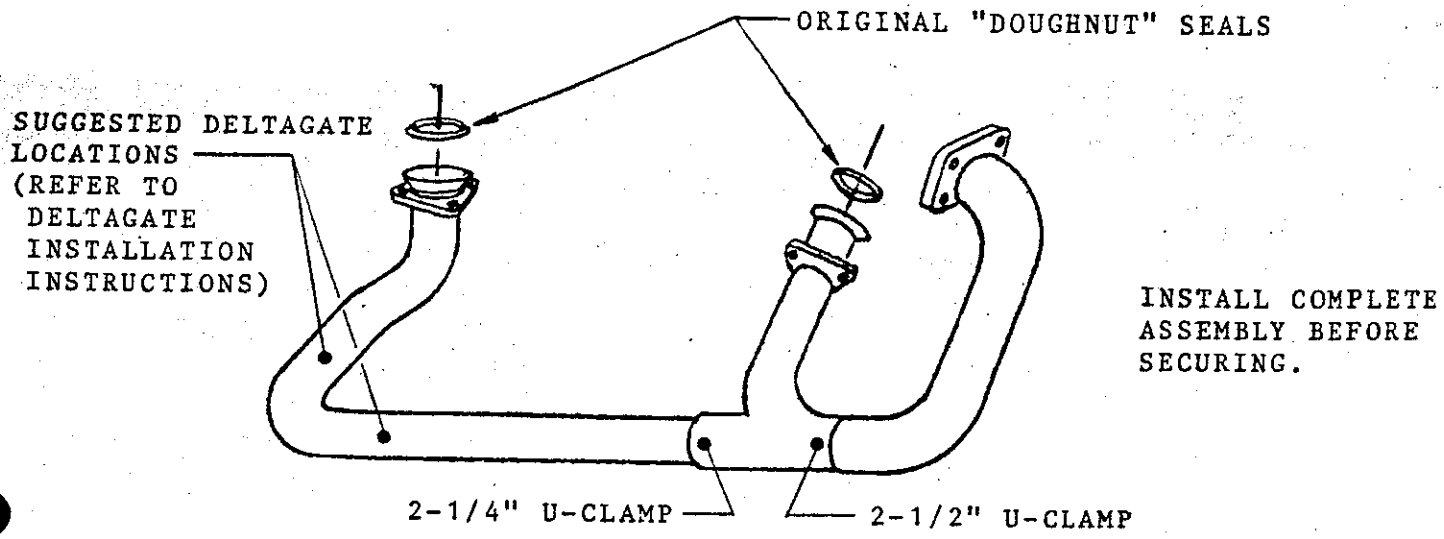

FIGURE C

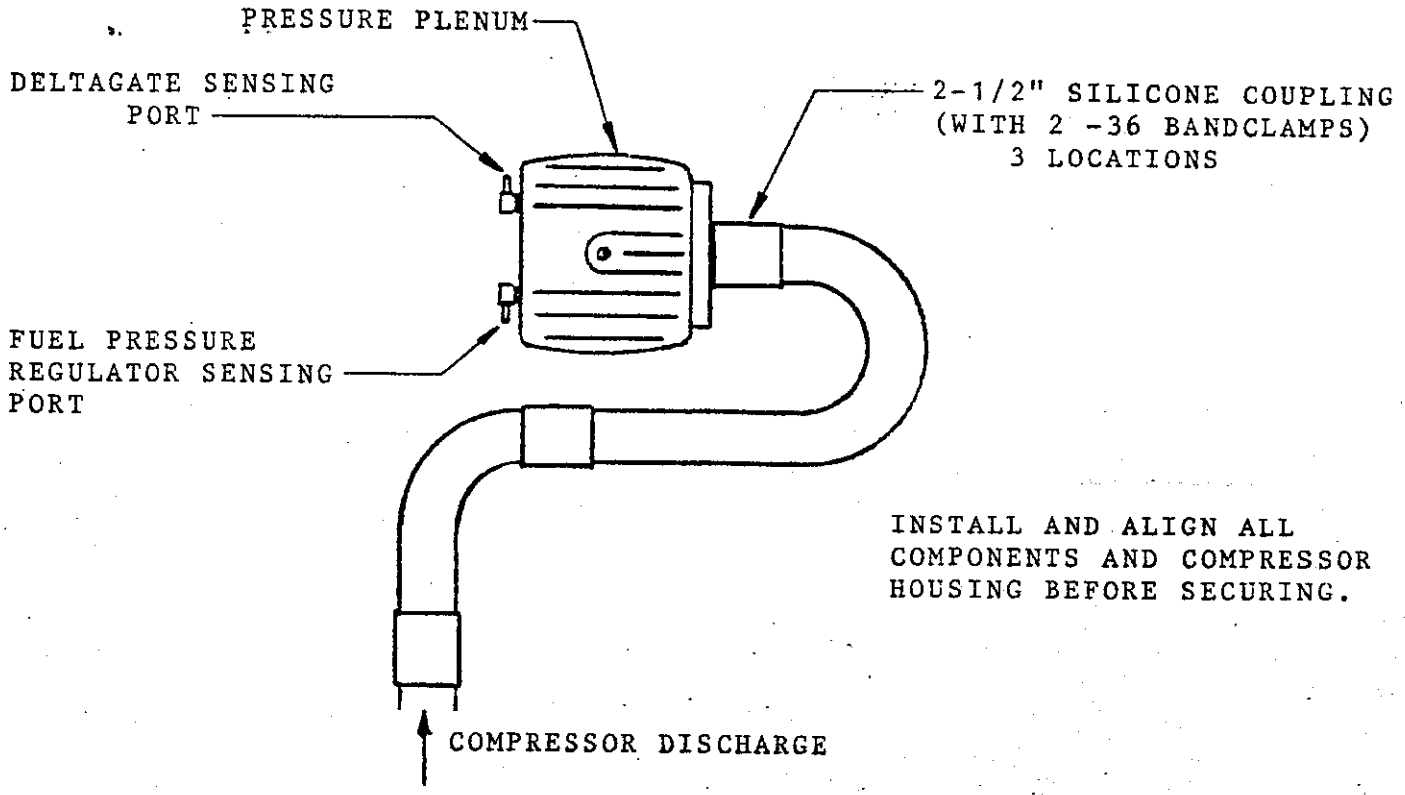

FIGURE D

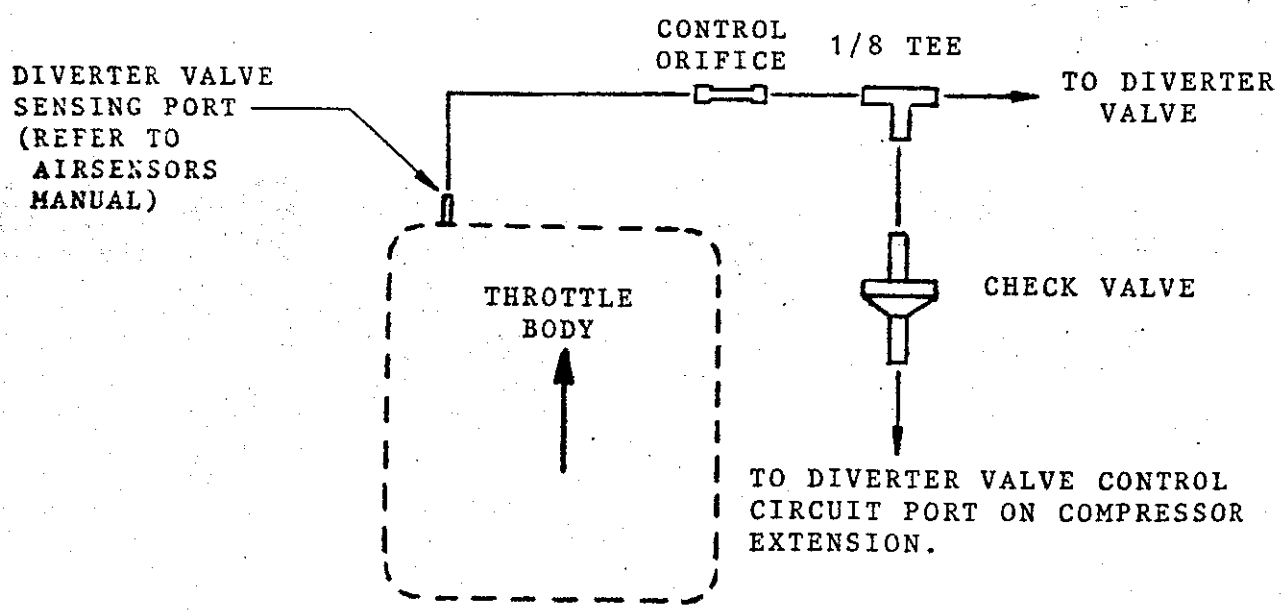

THIS SCHEMATIC WILL ALLOW THE DIVERTER VALVE TO FUNCTION NORMALLY WHILE PREVENTING ANY POSITIVE PRESSURE FROM REACHING THE DIVERTER VALVE ACTUATOR DURING BOOST CONDITIONS.

TURBONETICS MODEL 454TCI-HD

PARTS LIST

FUEL INECTION SYSTEM: Refer to AirSensors EFI Installation Instructions and Technical Manual, Model 8A-HD.

TURBOCHARGER SYSTEM:

1 Turbocharger assembly, H-3/P/1.30 Water-jacketed
1 Turbocharger mounting flange
  3 bolts 3/8-16x1¼
  3 3/8 flatwashers
  3 3/8 lockwashers
1 Turbine inlet gasket
2 Turbine discharge gasket
1 Oil drain gasket
2 Oil drain fitting, 5/8 hose x 3/8 MPT
1 Oil drain flange
  2 Bolts, 3/8-16x1"
  2 3/8 lockwashers
1 Oil drain jam nut (pan)
1 Oil inlet elbow, turbocharger, -4JIC x 1/8 MPT
1 Oil inlet elbow, engine, 1/8 MPT x 1/8 MPT
1 Oil inlet flex line assembly
1 Compressor extension
  1 3" ID silicone coupling
  1 Band clamp, -44
3' Aluminized flex duct, 3" ID
  2 Band clamp, -44
1 Throttle-body pressure plenum
  1 gasket, throttle body to plenum
  1 Mounting bolt, ¼-20x4"
  2 Hose elbows, 1/8 hose x 1/8 MPT
1 Compressor discharge tube assembly
  3 2½" silicone couplings
  6 Band clamp, -36
12' Emission/vacuum/pressure sensing hose
  (use as required)
2 DeltaGate wastegate assembly, 10101-5B
1 Turbine inlet tube assembly
  1 U-clamp, 2¼"
  1 U-clamp, 2½"
  4 bolts, 3/8-16x1¼
  4 lockwashers, 3/8
  4 nuts, 3/8-16
2 Thermal shielding blankets
1 Turbine discharge tube assembly
  4 studs, 3/8 x 2
  4 lockwashers, 3/8
  4 nuts, 3/8-18
1 Diverter valve control circuit kit
2 DeltaGate sensing elbow, 1/8 hose x 1/8 MPT
1 DeltaGate sensing tee, 1/8 x 1/8 x 1/8 (hose)
1 Boost gauge kit, 10350
1 Water-jacketed center section installation kit, 10553

NOTE: Additional hardware such as fasteners, brackets, fittings, etc., may be

AIRSENSORS™

Single Point

ELECTRONIC FUEL INJECTION SYSTEM

by AIRSENSORS

Model N-8A for V-8 Automotive Applications

Model N-8A-HD for V-8 Heavy Duty Applications

APRIL 1986

TECHNICAL MANUAL and Owners Guide

AIRSENSORS, INC., 708 INDUSTRY DRIVE, SEATTLE, WA. 98188

AN INTRODUCTION
to
AIRSENSORS

AirSensors, Inc. (ASI) has been involved in the research and development of sensor technology for about five years. Air mass flow devices designed and developed by ASI have been in limited production for several years. These employ "hot wire" anemometry, coupled with electronics and are used primarily to optimize combustion processes.

The first of a family of products developed to use ASI's air mass sensor is Electronic Fuel Injection (EFI) by AirSensors. There are less than a dozen companies worldwide with the technology to provide EFI. AirSensors is the first company to offer an EFI system designed specifically to replace existing automotive carburetors. EFI by AirSensors has been in limited production for nearly two years. First systems were supplied to B & M Automotive Products (California) as part of "Superjection", featuring B & M Forced Induction systems (superchargers) with EFI.

AirSensors EFI systems increase performance by improving power, low end torque, driveability, cold start and mileage. This is achieved by electronically computing and controlling the appropriate air-to-fuel ratio from monitored engine operating conditions. It brings the benefits of OEM electronic fuel injection to the automotive aftermarket.

A joint venture company, AirSensors International Co., Ltd., (ASICO) is the only manufacturer of carburetors or EFI systems in Taiwan. ASICO is AirSensors' primary manufacturing resource for lower product cost. This association also provides entree to the Asian Pacific Rim where ASI is currently developing multiport system designs for several small auto manufacturers in Taiwan, Korea and India and anticipates becoming a major EFI supplier in that area. Eventually these advanced EFI systems, some with supercharging and turbocharging, will be offered in the U.S. aftermarket.

Current research and development activities are focused upon natural gas combustion control and the use of compressed natural gas in internal combustion engines. Biomass fuel systems, including those using alcohol derivatives from corn, wheat, sugarcane waste and other agricultural sources, are pending near-term research projects with great future potential.

Single Point

ELECTRONIC FUEL INJECTION SYSTEMS

Aftermarket EFI Conversion Kits

"N" Model, single point, Electronic Fuel Injection (EFI) Systems by AirSensors are designed specifically for AirSensors normally aspirated V-8 and V-6 engine EFI conversion kits. The kits include virtually all fuel, air and electrical components for conversion of the specified engine application. These are throttlebody type systems designed to replace existing carburetors and provide benefits comparable to those afforded by OEM single point electronic fuel injection. They can also be adapted for forced induction using an appropriate B & M supercharger if sufficient underhood clearance is available.

EFI Systems by AIRSENSORS provide a dramatic improvement in power and driveability in a variety of applications. On a GM equipped 454 motorhome chassis, an average torque increase of 30% is achieved over the entire RPM range, measured at the rear axle. Vans, Towing Vehicles, RVs, and Off-Road Rigs experience similar results. EFI by AIRSENSORS returns the pleasure to driving.

AirSensors EFI systems are recommended for specific applications using the existing emission control devices provided. These systems employ "hot wire" anemometry to measure the mass of intake engine air and are not affected by changes in altitude, temperature or humidity. They electronically determine engine operating conditions and control the injection rate of gasoline to optimize desired performance. Adjustments for engine matching include basic air/fuel ratio selection and enrichment for cold start, acceleration, heavy load and idle conditions.

Each Model EFI system has been designed and engineered for a particular application. For example, the Model N-8A Kit was designed for pre-1981, 305 or 350 V-8 Chevrolet engine, manual transmission applications. It may be applied to, and use the emission devices of, other pre-1981 V-8 engines with approximately the same displacement range, and/or with automatic transmissions, but only with appropriate linkage and modification not supplied with the kit. AirSensors' EFI Kits are designed to be sold on an installed basis by qualified and trained installers, using the technical information supplied with each Kit.

This Technical Manual was prepared especially for installers and maintenance personnel experienced in the engine and drive train systems for which these EFI systems are specified. For forced induction applications, the installer must be familiar with pertinent B & M supercharging systems. The Technical Manual is intended as a guide for installing AirSensors EFI Kits only. After installation it must be left with the vehicle owner as his Owner's Guide.

TABLE OF CONTENTS

OPERATION

Fuel System	Section I
Throttlebody	1
Air System	1
Electronic System	2
	3

INSTALLATION

1.Preparation	Section II
Tools & Procedure	4
2. VehiclePreparation	
Non-Standard Application	5
3. Fuel System	
Fuel Tank	6
Component Location and Connection	
4. Intake Manifold	
Supercharger Applications	9
5. Throttlebody	
Linkages and Controls	10
6. Electronic System	
Wiring Harness	10
Sensor Locations and Electrical Connections	
Injector Connector Order	
7. Air System	
Air Plenum, Mass Flow Sensor and Filter	12
Emission Connections	
8. Start-up	
Checks and Tests	14
9. Adjustments	
Engine Matching Adjustments	15

MAINTENANCE AND TROUBLESHOOTING

Maintenance	Section III
Troubleshooting	18
Quick Checks	
Engine Will Not Start	A
Engine Starts: Will Not Run	B,C,D
Engine Runs: Driveability Improvement	E
Engine Runs: Fuel Economy Improvement	F
	G

GENERAL INFORMATION

Factory Service	Section IV
	19

APPENDIX

Product Descriptions	Section V
EFI Kits: Parts Lists	
Warranty	

SECTION I

OPERATION

FUEL SYSTEM

The recommended fuel system, for which system components are furnished, uses the existing supply line from the gasoline tank to feed pre-filtered fuel to an electric high pressure pump. The output is again filtered and piped to the fuel rail serving the four electronic fuel injecters fitted to the throttlebody. Fuel pressure is maintained at 39 psi by a regulator downstream of the fuel rail, and the gasoline flow surplus to engine (injector) need, is returned to the gasoline tank.

A return line must be installed and safely connected to the tank, if not a part of the existing fuel system. Vaporlock problems are largely avoided by this recommended system because it returns unused fuel exposed to engine compartment heat to the tank and draws cooler replacement fuel from the tank. The use of an existing low pressure "in-tank" pump (which must be free-flowing in the event of pump failure) or a supplemental free-flowing electric "pre-pump" to maintain inlet pressure on the high pressure pump is recommended to reduce excessive pump noise and vaporlock in hotter climates.

Short loop systems which return unused fuel directly to the inlet of the high pressure pump have been installed successfully where heat build-up in the engine compartment has been minimized and positive pressure maintained at the pump inlet. This is a less complex installation which eliminates the need for a return line, if not available, but requires further evaluation before recommendation by AirSensors as a standard system.

THROTTLEBODY

A low profile four-barrel Throttlebody (T/B) fitted with four electronic fuel injectors and a fuel rail system is provided with ASI N Model Kits. It is designed to fit a four-barrel intake manifold and has both Holley and Quadrajet "spreadbore" bolt patterns. It has been installed on a two-barrel manifold with an adapter plate; however, **THIS IS NOT RECOMMENDED** because fuel "puddling" hinders performance and reduces fuel economy.

The four butterfly valves open and close simultaneously; it is not designed for primary and secondary opening operation as provided in many carburetor designs. Air flow is adequate for large block V-8 engine applications. Consequently, full air flow for small block engines applications is available at much less than wide open throttle positions. A low profile two-barrel throttlebody, desirable for many of today's smaller engines, is under design.

Throttlebody injectors are located above the butterfly valves. Two of the provided vacuum ports (angled or marked PV) are timed delay ports. The other vacuum ports (straight or marked MV) are full manifold (hot) vacuum.

The throttle arm, designed specifically for Chevrolet applications, will accommodate the linkages for a small block Chevrolet engine with manual transmission with little or no modification. All other applications will require adapters, many of which are commercially available. AirSensors will eventually have linkage conversion kits for most popular engine configurations in appropriate size ranges.

AIR SYSTEM

Engine intake air is inducted through an air filter to the inlet of AirSensors' proprietary Air Mass Sensor (AMS). This device is a conduit tube in which an electrically heated wire is centered. As air flows by the wire, heat is dissipated from the wire. (The heated wire is susceptible to shock damage and will part at stresses above 50 G's. Although quite rugged, the air mass sensor must be shock isolated from direct engine vibration.)

Electronic circuitry, which is a part of the device, senses the resulting temperature change and causes additional electrical current to flow to the wire, maintaining a constant pre-determined temperature above that of the incoming air. The current required for this purpose is a mathematical function of the mass flow (rather than volume) of the incoming air. For this reason, this device provides the basis for accurate air-fuel ratio control without regard for altitude, temperature or humidity changes.

Response time is very rapid. An electrical signal representing instantaneous air mass flow is generated electronically and transmitted to the EFI system's Electronic Control Unit as one of several inputs for computing and controlling the fuel flow appropriate for engine operating conditions.

The air plenum, which conducts intake air from the outlet of the air mass sensor to the throttlebody, is subject to friction losses proportional to air flow. Attractive air plenums designed by B & M for restrictive hood clearance problem installations are available on an optional basis. Although these have higher friction losses, they flow sufficient air for most applications and were designed primarily for low hood supercharger applications.

ELECTRONIC SYSTEM

The Electronic Control Unit (ECU) controls the operation of the entire EFI system. It receives electrical input signals from the air mass sensor, tachometer, engine temperature sensor and inductive pick-up (sparkplug impulse), computes the quantity of fuel required for optimum engine operation, and sends electrical impulses to the fuel injectors for the required fuel. A recent design improvement enables the ECU to refine air/fuel ratio control from exhaust gas oxygen (EGO) sensor input signals (MODEL N-8B).

The ECU has a primary air-to-fuel adjustment (A/F ratio selection), four secondary enrichment adjustments (COLD, LOAD, IDLE, ACCEL) and one "break down" adjustment (DRIVE HOME). These are limited adjustments to enable the installer to match the EFI system to the specific vehicle application. Instructions for the adjustments are provided on the side and end of the ECU.

A simple block diagram illustrating how the ECU functions and how its engine matching adjustments relate to EFI system control, is provided below:

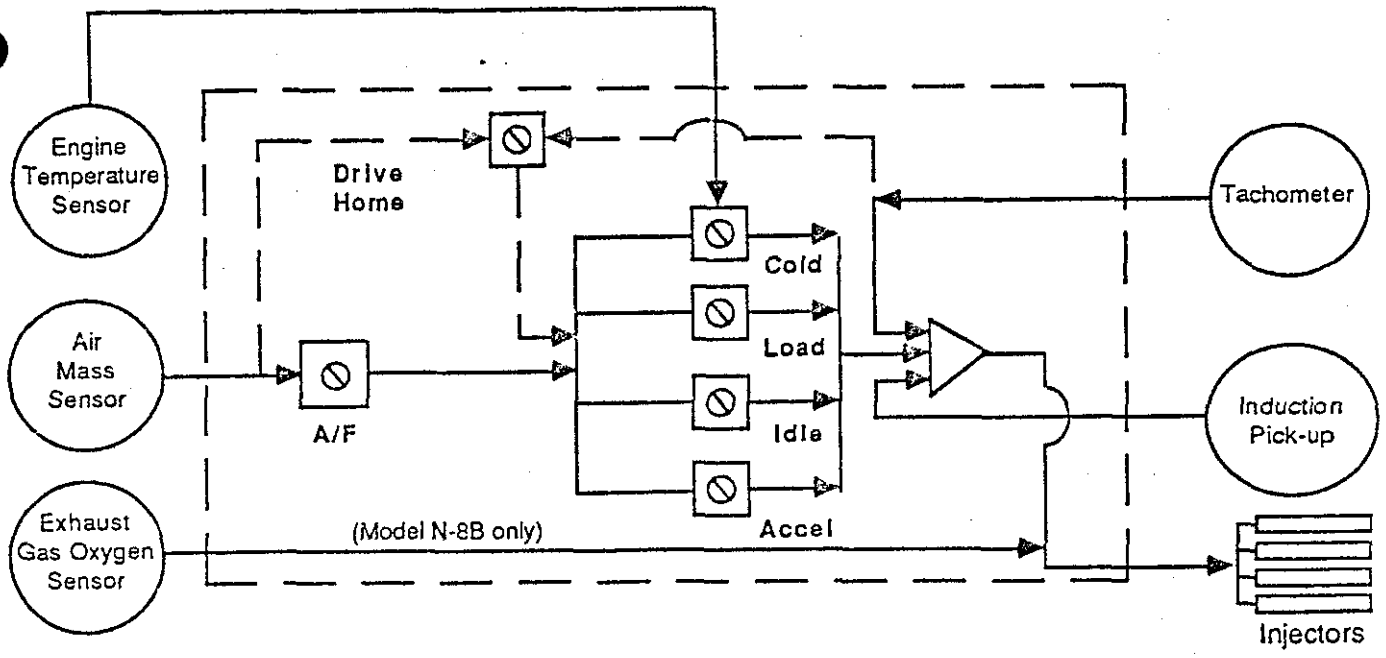

ECU ENGINE MATCHING ADJUSTMENTS -- FIGURE 1

This diagram is not intended to illustrate how the ECU functions electronically; this is fairly complex. The interrelationships of inputs, outputs and how the adjustments affect the outputs is accurately illustrated above, however, and provides an understanding for using and properly sequencing the engine matching adjustments. Further detail is provided in Section II.

SECTION II

INSTALLATION

1. PREPARATION

Tools and Procedure

• WARNING •

Tools must include a dry chemical fire extinguisher (Class A, B & C). **GASOLINE IS HIGHLY FLAMMABLE;** electrical and static **SPARKS MUST BE AVOIDED.** Use sparkproof tools where appropriate.

Aside from normal hand tools and supplies for engine and systems repair and maintenance, some special equipment, listed below, will make the installation and troubleshooting of AirSensors Electronic Fuel Injection Systems easier and more efficient.

ITEM	QUANTITY	TYPICAL (or equivalent)
Volt/Ohmeter	1	Snap-on p/n MT406 Matco p/n ET586
Test Light	1	Any 12V DC
Fuel Pressure Gage	1	Snap-onp/nMT321B Matco p/n FIT13
Hose Pinch Pliers	2	Snap-on p/n VP07
Steel Tubing Cutter	1	Myte-Mite
Hole Cutter (1 ")	1	Green-Lee
Engine Performance Analyzer (w/EGA)	1	Allen "Computer Test Center" Bear "Ace" Sun "Interrogator"
Exhaust Gas Analyzer (EGA) (Stand alone)	1	(if not included above) Bear p/n 42-907 Sun "The Inspector"

A Check all parts against the EFI KIT parts list (Appendix).

● CAUTION ●

Make sure the vehicle on which the EFI system is to be installed is in good operating condition. Electronic fuel injection will not cure mechanical and electrical faults - low compression, poor cylinder balance, faulty ignition and similar basic problems - any better than will the installation of a new carburetor. It is especially important to have a good ignition system; interference from **BAD PLUGS** or **FRAYED WIRES WILL CAUSE EFI MALFUNCTION.**

2. VEHICLE PREPARATION

Prior to beginning any dissasembly:

A Idle warm motor (out of gear, with brake set) and test and label each hose for vacuum connection at the carburetor (manifold or ported).

B Clean both battery terminal connections.

C Clamp off the fuel supply line, disconnect the hose at the stock pump and drain.

D Drain the gasoline tank, if a return line is to be installed, to replace the existing fuel tank "sending unit" with one which has a return line fitting.

E To work on the fuel system, it is recommended that the vehicle be raised and safely supported to a comfortable working height.

● NON-STANDARD APPLICATION ●

AirSensors EFI Systems are engineered for specific applications. For example, Model N-8A is specifically applicable to pre-1981 Chevrolets with 305 or 350 engines and manual transmissions. The EFI Kit provided for this application contains essentially all of the parts for a normal installation. However, the EFI Kit can also be applied to V-8 engines with similar displacement, with manual or automatic transmissions, provided modified throttle, cruise control and transmission linkage requirements are met.

F Procure all adapters and linkage devices needed, if making a non-standard installation.

Some adapters and linkage devices for this purpose are commercially available from suppliers like Holley and Mr. Gasket. AirSensors plans to supply linkage adapter kits for most popular applications as specific needs are identified and parts designed and manufactured. There will always be a need, however, for access to basic metal fabrication equipment to make custom devices for non-standard installations. Once the primary throttle, transmission and cruise control position and geometry has been disrupted by manifold changes or auxiliary equipment, custom modification will be required to restore that geometry.

3. FUEL SYSTEM

Fuel Tank

A If the vehicle has no return line, remove the existing sending unit and replace with a sending unit with a 1/4" OD or larger return line fitting. Always inspect tank and clean, if required.

WARNING

NEVER USE THE VAPOR RETURN LINE from the charcoal vapor canister as the fuel return line.

Alternatively, a return line fitting may be installed in the existing sending unit, making sure that a return tube is fitted inside the unit to a location near the supply line pick up. Remove and replace the supply line filter (sock) if using the existing sending unit.

There are gasoline-tight screw-in devices which can be used to tap gasoline tanks at mid-level for return line connection, if sparkproof tools and proper precautions are exercised. These should only be used by installers experienced in gasoline tank repair.

DUAL FUEL TANKS

Dual fuel tank equipped vehicles must be plumbed to return excess fuel to the tank in use to supply fuel to the EFI system, to avoid tank overflow and other problems. Remotely activiated dual three-way valves are highly recommended and are available as optional equipment.

• COMPONENT LOCATION AND CONNECTION •

Fuel system problems can be largely avoided by locating system components as recommended below. System and components must be protected - shielded if necessary - from exhaust heat and engine compartment heat. Locate all components to protect from road damage and to provide for periodic servicing. Connect all hoses with hose clamps.

B By-pass or remove the mechanical fuel pump, capping the fittings or blocking off the opening to prevent leakage.

C Low Pressure Fuel Filter - Locate at the inlet of fuel pump (except "in-tank") with minimum of 4" separation from pump inlet.

D High Pressure Electric Fuel Pump - Locate below mid-level of the fuel tank (best if located below tank level in a protected position) and fasten to frame close to the tank.

• PRE-PUMP •

If the vehicle has an "in-tank" electric fuel pump, use it as a "pre-pump" to feed the supplied electric high pressure fuel pump.

A pre-pump is always recommended for vehicles operating in hot climates and for Class "A" RV's and will be supplied as an option, if ordered.

E High Pressure Fuel Filter - Locate at the outlet of the high pressure fuel pump at frame level.

F Steel Fuel Tubing - Use existing steel fuel tubing where practical to provide secure routing and for heat dissipation. Cut with tubing cutter to install components, connecting with high pressure fuel hose and non-cutting metal clamps (see below). Replace any existing low pressure jumper hoses with high pressure hose (see below).

• FITTINGS - HOSE •

Fuel Hose Clamps/Fittings - Use non-cutting, rolled-edge metal hose clamps designed for the specific hose size, Awab Aluzinc 14, Global Metrics ABZ - NO4 or equivalent. Make sure all hose fittings are identical in size at both ends of hose and the hose I.D. matches.

Low Pressure Fuel Hose - Use high pressure hose (see below) and install with restriction-free bends and in protected locations. Only a small quantity of low pressure hose is required for the entire EFI installation; the use of high pressure hose instead protects against accidental over pressure in the event of regulator failure.

G High Pressure Fuel Hose - Use only double braided high pressure gasoline hose, Aeroquip 1525-(hose size code) or equivalent, and install with restriction-free bends in protected locations. **USE EXCLUSIVELY** from outlet of high pressure fuel pump to fuel rails and from fuel rails to inlet of fuel pressure regulator.

H Throttlebody Fuel Rail - The fuel rail is an integral part of the Throttlebody. Connect the outlet of the high pressure fuel filter to the inlet (either end) of the fuel rail system with high pressure hose.

I Fuel Pressure Regulator - Connect the outlet (other end) of the fuel rail to the inlet (side connection) of the fuel pressure regulator with high pressure fuel hose. Locate the regulator close to the fuel rail. Connect the outlet of the regulator to the return fuel line with high pressure fuel hose. (Connect the dry side of the regulator diaphragm chamber to manifold vacuum, using 5/32" ID vacuum hose between the 3/16" stem on the regulator and one of the two 3/16" straight nipples, marked MV, on the throttlebody.)

J Fast Idle Air Valve (Optional) - If idling is a problem, bolt this optional device to the intake manifold near the throttlebody. Locate to retain engine warmth after engine becomes warm.

4. INTAKE MANIFOLD

• MATCHING MANIFOLD •

In many instances, a specific manifold matched with an AirSensors EFI system will result in a dramatic improvement in the performance of a normally aspirated engine. For example, an Edelbrock Torker II (p/n 5001) works exceptionally well on a Chevrolet 305/350 V-8, improving low end torque and providing excellent performance. Manifold recommendations are available from AirSensors distributors or from the factory.

The AirSensors normally aspirated EFI system was designed for a dual plane, 180 degree intake manifold using a four barrel, four injector throttlebody, but works best with open plenum manifolds. It fits directly to a four barrel intake manifold with a Holley bolt pattern but requires a commercially available spacer for mounting on Quadra-Jet manifolds, using the alternate bolt pattern on the throttlebody. A manifold change is HIGHLY RECOMMENDED if the engine is equipped.with a two barrel manifold.

If using a dual plane, 180 degree manifold, proper sequencing of injector firing is indicated in Figure 2 of the Electronic System text below. This sequencing also works well with open plenum manifolds.

• SUPERCHARGER APPLICATIONS •

ASI N-8 Models are currently designed for a maximum fuel flow of 33 gallons of fuel per hour. This limits their use for supercharged applications. A B & M 144 cubic inch Forced Induction Supercharger, installed in accordance with B & M Installation Instructions, bolts directly to the throttlebody with supplied B & M parts. Contact B & M for supercharger details.

5. THROTTLEBODY

Linkages and Controls

A Before removal of the carburetor, observe the linkage connections for throttle, transmission kick-down, cruise control and so forth at the carburetor throttle arm.

B Remove old manifold and install new manifold, if recommended.

C Install throttlebody, using provided bolts, washers and gaskets.

D Duplicate the throttle linkage action and geometry on the throttlebody throttle arm, using carburetor clips, clevises, pivot balls as necessary.

E Reconnect the labeled vacuum hoses to the proper vacuum ports on the throttlebody.

F Cap all unused ports with provided caps.

6. ELECTRONIC SYSTEM

Wiring Harness

A Locate a firewall access hole (1 ") through which to pass the "injector connectors end" of the wiring harness, after installing the provided rubber grommet, leaving the "ECU connector end" inside the passenger compartment.

B Cut a hole, if necessary, first checking BOTH SIDES of the firewall for clearance. Harness connection instructions are provided below.

Sensor Locations and Electrical Connections

C Bolt the Engine Temperature Sensor to the intake manifold at the "exhaust crossover" point for hot climate installations. Bolt to the rear of manifold for cool or cold weather installations.

D The Induction Pick-up Sensor for V-8 applications is slipped over the spark plug wire for the second cylinder in the engine firing order (#8 cylinder for all Chrysler, General Motors and Ford Engines, except Ford 351 & 400-#3 cylinder and Cadillac 425 & 500-#5 cylinder). The connector side of the sensor is oriented toward the distributor, as indicated on the side of the sensor. It may be necessary to remove the sparkplug boot to pass the wire through the sensor. Check to assure a good electrical connection after replacing boot. (Performance may be improved on some engine/manifold combinations by using a different wire; try this only during troubleshooting.)

E Connect all wire leads as follows:

Small White - to IGN at the fuse block, to the large red wire on GM HEI distributors or before ballast resistor on point distributors.

Green - Distributor side of coil, tachometer connection on HEI distributor.

Gray - Engine Temperature Sensor.

Violet and Black (with white connector) - to Induction Pick up Sensor.

Injector Connectors (four) - See Figure 2 below.

Long Red - to the positive (+) terminal on the fuel pump. (Ground the negative terminal to the frame.)

Large Black (twisted with large white) - to the negative (-) battery terminal.

Large White (twisted with large black) - to the positive (+) battery terminal.

Red (with black ground strap) - to the Optional Fast Idle Air Valve. (Ground to Valve bolt.) Tape off wires if not used.

Air Mass Sensor Connector - to matching connector on AMS harness. The connection for the air mass sensor is also made before start-up. It must be disconnected to adjust Drive Home as noted below, however, and then reconnected.

• SHORTENING WIRING HARNESS •

Shortening the wiring harness is **NOT** recommended. If shortening is required, **DO NOT ELIMINATE** or by-pass resistor in the green lead (system will not function).

Injector Connections

The electronically controlled injectors are fired sequentially to optimize cylinder balance and promote smooth idling and best engine performance. The order of firing varies with engine types as noted in Figure 2 below and is particular important when using a dual plane, 180 degree manifold. Injector locations on the throttlebody (which may not be marked) are: (1) passenger side, rear; (2) driver side, rear; (3) passenger side, front; and (4) driver side, front.

• INJECTOR CONNECTOR ORDER •

INJECTOR CONNECTOR	INJECTOR POSITION All Chevrolets All Chryslers All Fords except Ford 351 & 400	 Cadillac 450 Cadillac 500
A (Brown with red)	(1)	(3)
B (Black with red)	(2)	(4)
C (Orange with red)	(3)	(1)
D (Yellow with red)	(4)	(2)

FIGURE 2

7. AIR SYSTEM

Air Plenum, Air Mass Sensor and Air Filter

A Place provided gasket on throttlebody and place plenum adaptor on gasket. (Plenum adaptor is not required for all air plenums.)

B Place provided gasket on plenum adaptor and place air plenum on gasket, orienting nozzle to clear space for hose installation (usually the passenger side). Use provided threaded bolt, gasket and wing nut to hold down air plenum.

C Attach flexible hose to air plenum nozzle with hose clamp.

D Attach outlet end of air mass sensor (direction of arrowhead on AMS) to other end of flexible hose with hose clamp.

• VIBRATION - CLEARANCE •

If using an optional B & M air plenum, **MAKE SURE THERE IS NO METAL TO METAL CONTACT** between the throttlebody and the air plenum or between the air plenum and the air mass sensor to transmit vibration and break sensor wires. Wires will break if vibration forces exceed 50 G's. Certain combination of engine and supercharger harmonics will break wires in close-coupled air mass sensors even with the above precautions. If this occurs, **CORRECT BY REMOTE MOUNTING** the air mass sensor with a 4" ID flexible hose extension.

Make sure there is sufficient **FREE CLEARANCE** for AMS and **FILTER** during **HARD ENGINE TORQUE** movements.

E Attach air filter over inlet end of AMS with hose clamp.

F Secure air filter to fender well, radiator support or similar structure (not to engine or engine accessories) with provided bracket, away from pulsating air currents. Air filter should be located to draw cool air into the engine, for best performance.

The air plenum must be installed on the throttlebody with pliable gaskets (including one under the hold down bolt) to minimize engine vibration and reduce dust infiltration. The air mass sensor must be oriented as indicated by flow direction and is connected to the air plenum by the provided 14" length of flexible rubber hose. The air filter is connected directly to the air mass sensor. Use the provided hose clamps on all air hose connections.

• AIR CURRENTS •

SHIELD or **RELOCATE THE AIR FILTER** away from pulsating **AIR CURRENTS**; fan blades or alternator fins will create false air mass flow values. A thin open cell polyurethane sock may be used to cover the air filter. Secure the AMS and air filter to the fender well or body, not to the engine or engine attachments which will transmit unacceptable vibration. The AMS is designed to withstand body vibrations.

Emission Connections

G Drill and tap air plenum (unless provided) for reconnecting the PCV fresh air supply.

ECUs for Model N-8B EFI systems include EGO circuitry and wiring harness connections for exhaust gas oxygen sensing.

H All of the original emission equipment supplied by the vehicle manufacturer, with the exception of the carburetor, must be retained and operated within its original specifications as designated by the engine manufacturer.

FIGURE 2, TYPICAL EMISSION CONTROL HOSE CONNECTIONS, illustrates the hose connections for a 1986 GM P-series chassis, 454 CID-TURBO 400 Class A motorhome. However, each vehicle has been provided with a specific diagram for its particular emissions connections which must be followed to comply with the emissions standards for that vehicle.

Air Resources Board
4/28/86

SUGGESTED TEXT FOR INCLUSION WITH EMISSION CONTROL CONNECTION DIAGRAM:

"The AirSensors EFI system is compatable with all emission control devices normally installed on the standard production engine with the exception of those related to choke control and carburetor bowl venting. (Both of these items are eliminated with the use of the EFI system.) The EFI throttle-body assembly is equipped with several service ports to facilitate connection of emission control elements. The diagram above relates to emission connections as applied to the 1986 model year configuration. For earlier model years that may not include all of the emission controls of the 1986 configuration, disregard as appropriate and cap all unused throttle-body ports. Note: The identified emission controls are the major ones associated with the lines shown and may be in series or parallel with other control elements. When connecting to the throttle-body ports noted, retain all such series/parallel connections that existed in the original stock carbureted configuration. Due to the nature of the EFI system, it is not necessary to connect any of the original air cleaner air damper controls."

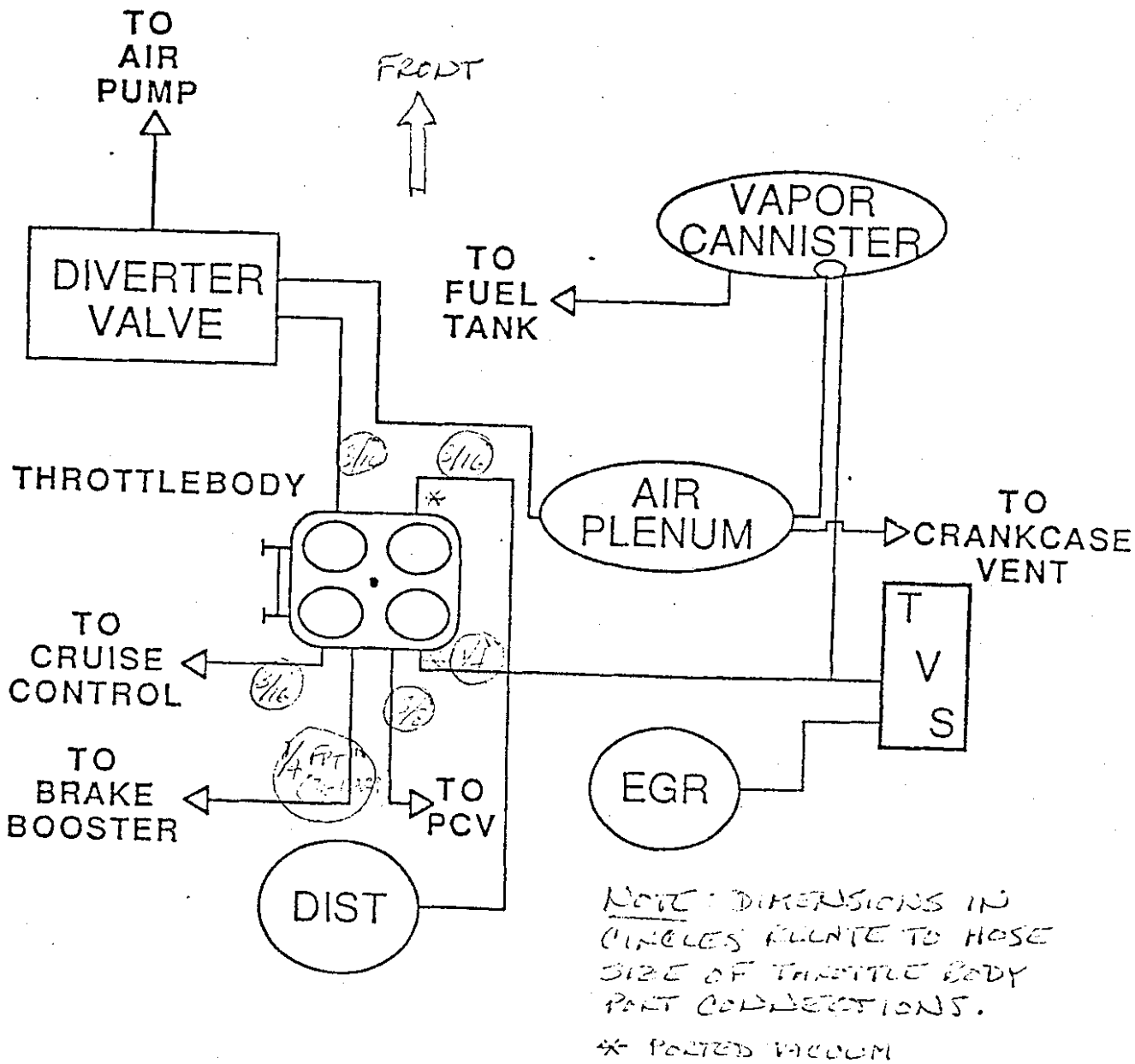

TYPICAL EMISSION CONTROL HOSE CONNECTION
FIGURE 2

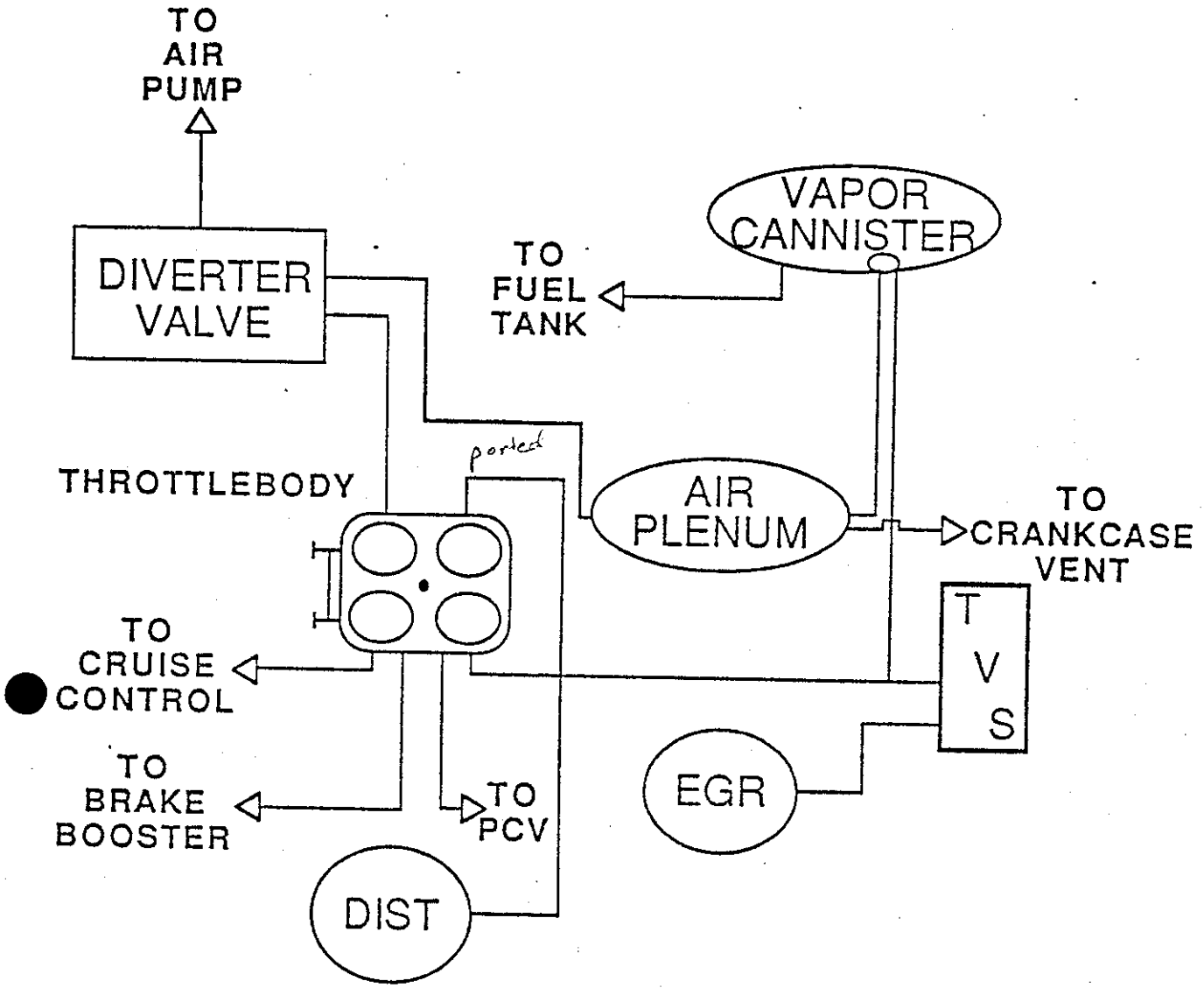

TYPICAL EMISSION CONTROL HOSE CONNECTION
FIGURE 2

9. ADJUSTMENTS

Engine Matching Adjustments

• PRECAUTIONS •

Make all Engine Matching Adjustments, except **COLD**, with the **ENGINE WARMED**. Assure the vehicle is **SECURED FROM MOVING** while making standing adjustments. Drill and tap the exhaust line (1/8" pipe) to sample the engine exhaust at the **INLET** of the catalytic converter, if so equipped. (Insert 1/8" pipe plug after sampling.)

It is **HAZARDOUS TO DRIVE** and **ALSO MAKE MOVING ADJUSTMENTS** - use a chassis dynamometer or a helper while adjusting **LOAD** and **ACCEL.**

The above precautions and the adjustment instructions below are summarized in labels fixed to the side and end of the ECU.

There are five Engine Matching Adjustments accessed through holes in the cover of the ECU. A Drive Home adjustment in the side functions only when the air mass flow signal is lost. Figure 1 is repeated below for a review of adjustment interrelationships.

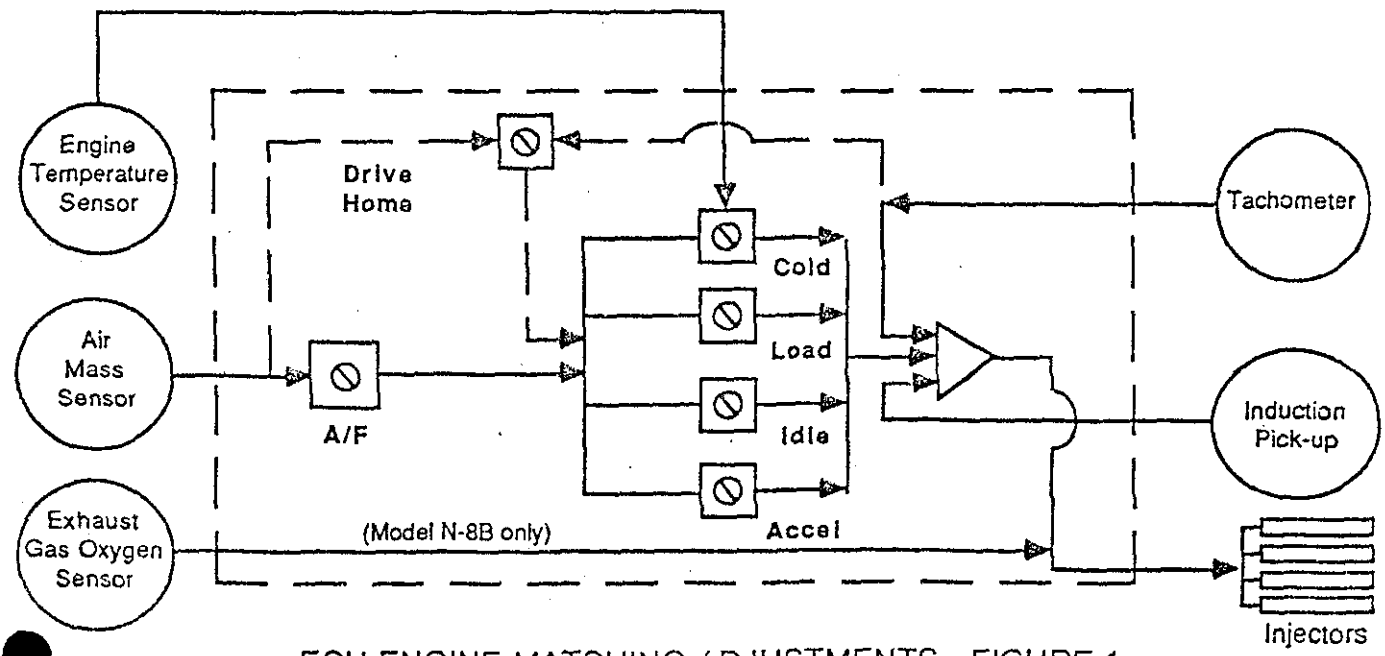

ECU ENGINE MATCHING ADJUSTMENTS - FIGURE 1

The functions of the Engine Matching Adjustments are described below. In many respects the EFI system operates much like a carburetor; the adjustments are therefore similar. Note as indicated on the labels, clockwise adjustments (toward R) provide richer mixtures (except for Drive Home).

A/F

A Adjust at 2500 RPM, with no load, to about 2% CO reading for exhaust. Sparkplug or tailpipe color, after some use, should be light gray or tan (white color indicates too lean a mixture; black indicates mixture too rich).

Controls the basic **AIR** to **FUEL RATIO** of the gasoline/air mixture for warm, steady, level driving. Note in Figure 1 above, all other adjustments provide **ENRICHMENT,** and decreases the A/F ratio, for improved performance and driveability under other driving conditions.

IDLE

B Adjust in gear if vehicle has automatic transmission, with air conditioning on, if so equipped, for smooth operation, using screw adjustment on throttlebody for appropriate RPM.

Controls enrichment during engine idling condition. Cylinder imbalance, poor engine condition or other factors unrelated to EFI, may prevent perfect idling.

LOAD

C Adjust on chassis dynamometer near full throttle to about 4% exhaust CO reading. If no dyno is available, it can be adjusted while driving under load, by a passenger (for safety), by vehicle performance during acceleration (power "sag" or "ping" indicates mixture too lean) and noting exhaust (black smoke indicates mixture too rich).

Controls enrichment during climbing, passing, towing or other operations imposing a heavier LOAD on the engine. Will decrease "mileage" if set too rich.

ACCEL

D Adjust to eliminate initial hesitation or "bog" during quick acceleration. Lean out for black exhaust "puffs".

Controls enrichment for "accelerator pump" effect during quick acceleration.

DRIVE HOME

E Adjust after first disconnecting the small wiring harness plug from the air mass sensor to simulate loss of air flow signal. May require adjusting to "full rich" position (**COUNTERCLOCKWISE**) to start engine, leaning somewhat thereafter.

This is not a normal operational adjustment. It provides air/fuel ratio control based upon RPM input only if loss of air flow signal occurs (open circuit, broken AMS wire). Expect minimal engine performance only. This is a safety feature to eliminate roadside stranding.

For long "drive home" operations, readjustment of both **DRIVE HOME** and **A/F** settings may be required to improve minimal performance.

COLD

F Adjust only with **COLD ENGINE** to smooth idle after adjusting **IDLE** with warm engine. (Usually this adjustment is made the morning following installation.)

Controls enrichment for "choke" effect. Functions only when Engine Temperature Sensor indicates engine is cold.

The vehicle is now adjusted for optimum performance and driveability. **EFI** by **AIRSENSORS** returns the **PLEASURE** to **DRIVING!**

● NORMAL STARTING ●

Most vehicles equipped with a properly adjusted AirSensors EFI system should start immediately upon turning the key to START, without depressing the accelerator pedal, and then drive normally regardless of ambient temperature, altitude or humidity.

If immediate start-up does not occur, it may be helpful to turn key to the ON position for several seconds (to rebuild depleted fuel pressure), then return key to OFF and start up normally.

Some vehicles require more combustion air during start-up than others, especially during extremely cold weather. This is usually provided by installing a "fast idle" valve but it may be helpful to slightly depress your accelerator pedal during cold weather starting to provide additional intake air.

SECTION III

MAINTENANCE AND TROUBLESHOOTING

MAINTENANCE

The only scheduled maintenance for AirSensors EFI Systems is to clean and re-oil the air filter (K & N oil), replace the secondary fuel filter if clogged, check for fuel leaks and replace cracked or stressed hoses, every 20,000 miles or annually. The primary fuel filter may be removed and backflushed if clogged.

TROUBLESHOOTING

Following this text, you will find a one-page guide entitled **TROUBLESHOOTING - QUICK CHECKS** followed by several **TROUBLESHOOTING MATRICES.** The **QUICK CHECKS** guide will identify and resolve start-up difficulties which are usually minor. Although electronic fuel injection is quite complex, technically, it is relatively easy to install, adjust and maintain.

THE TROUBLESHOOTING MATRICES are provided to systematically track and solve more difficult problems associated with system malfunction or system fine tuning. These were developed from factory experience to efficiently trace and correct virtually any problem likely to be encountered in the field. Their designated use, indicated by MATRIX title, is outlined below:

ENGINE WILL NOT START (three matrices) - identifies basic problems during initial installation and indicates solutions.

ENGINE STARTS: WILL NOT RUN - identifies operating problems mostly during initial installation and indicates solutions.

ENGINE RUNS: DRIVEABILITY IMPROVEMENT - assists in fine tuning system after installation.

ENGINE RUNS: FUEL ECONOMY IMPROVEMENT - assists in fine tuning system after installation and after some operation.

AirSensors, Inc. has several Installation and Performance Technicians available for consultation in the event trouble shooting with the Troubleshooting Matrices provided in this Section proves unproductive. Call (206) 228-6200 and ask for installation assistance. This service is free for this purpose, if not abused.

TROUBLESHOOTING - QUICK CHECKS ..A..

MAKE THE FOLLOWING CHECKS TO ISOLATE PROBLEMS FOR TROUBLESHOOTING AIRSENSORS EFI SYSTEMS: (Make tests in sequence shown.)

1. Observe the light emitting diode (LED), on the middle end of the TOP printed circuit board inside the ECU, THROUGH THE SIDE SLOTS OF the ECU cover. When the ignition key is switched to the "ON" (not "START") position, the LED should glow, the relay click on, and the fuel pump should run. Approximately 7 seconds later, the relay should "click off", the pump stop and the LED go out.

This test, if successful, verifies the battery, switched ignition and fuel pump circuits.

2. Observe the same LED. When the ignition key is now switched to the "START" position, the fuel pump should again start and the LED should again glow and continue to glow during cranking. (The engine may not start.)

This test, if successful, verifies the tachometer circuit.

3. Observe the LED fitted to the end of the LOWER MIDDLE printed circuit board inside the ECU, through the slots nearest to the DRIVE HOME adjustment. When the ignition key is switched "ON", this LED should glow; when the engine is started and run, this LED should go out.

This test, if successful, verifies a valid air mass sensor signal. (If this LED stays on with the engine running, the air mass signal has been lost - improper connection, AMS wire breakage - and the ECU is in the DRIVE HOME mode.)

CAUTION, REMOVE COIL WIRE BEFORE MAKING THIS LAST TEST. (The engine could backfire.)

4. Remove the air plenum, ground the gray Engine Temperature Sensor lead to the manifold and have another person momentarily crank the engine. Observe the four injectors inside the throttlebody during cranking. Each should pulse fuel sequentially (one at a time).

This test, if successful, verifies the operation of the ECU, and injectors, during start-up. (ECU malfunction is rare, check last.)

5. In the event the engine becomes **"FLOODED"** while attempting to start, twist and remove fuse from the ECU and crank the engine until clear. Reinsert fuse and start engine.

If the above quick tests are **NOT** SUCCESSFULLY COMPLETED, USE the appropriate **TROUBLESHOOTING** MATRIX. If still **UNSUCCESSFUL**, call the AirSensors Installation and Performance Technician (206) 228-6200.

ENGINE WILL NOT START

INITIAL CHECKS

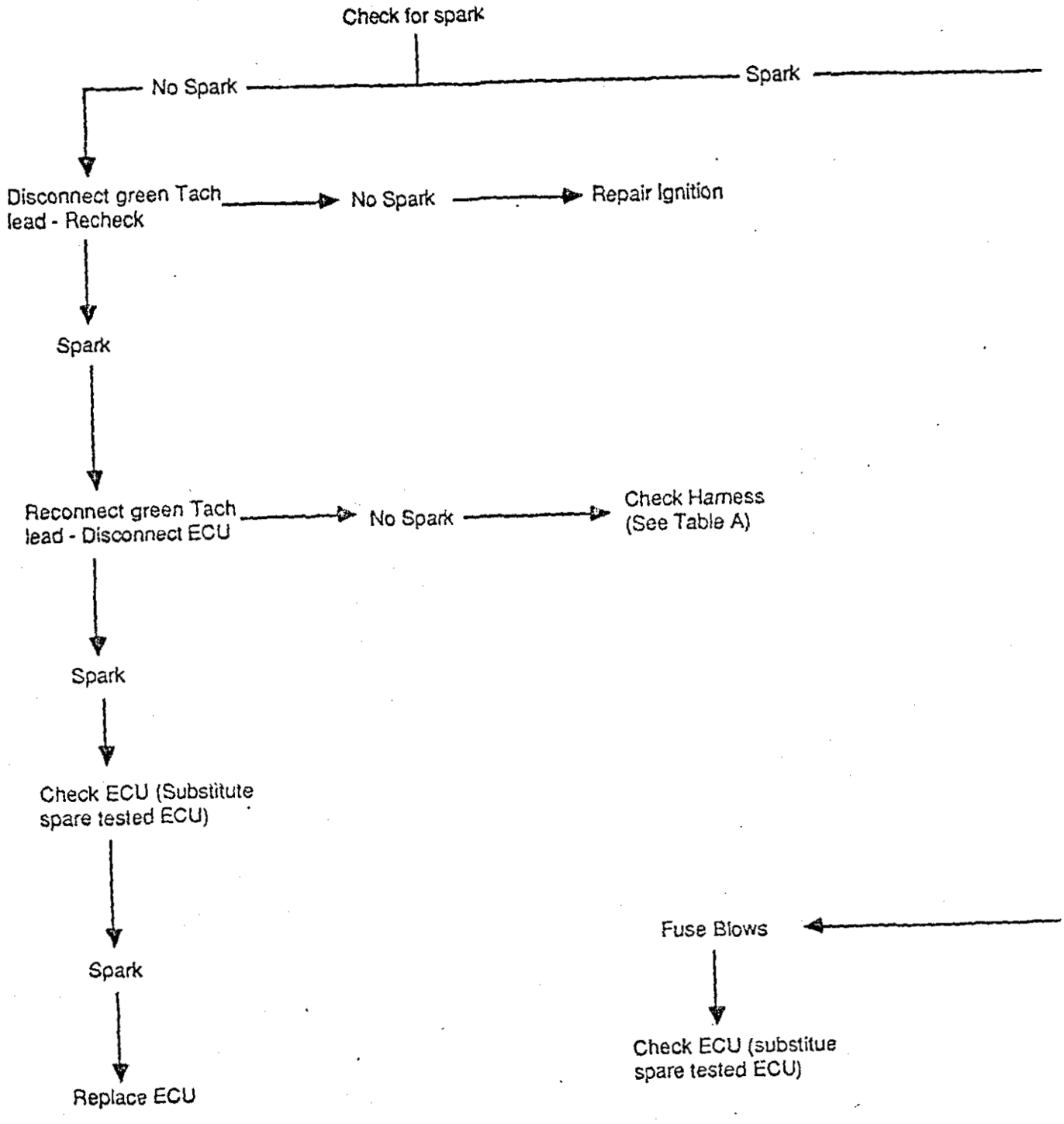

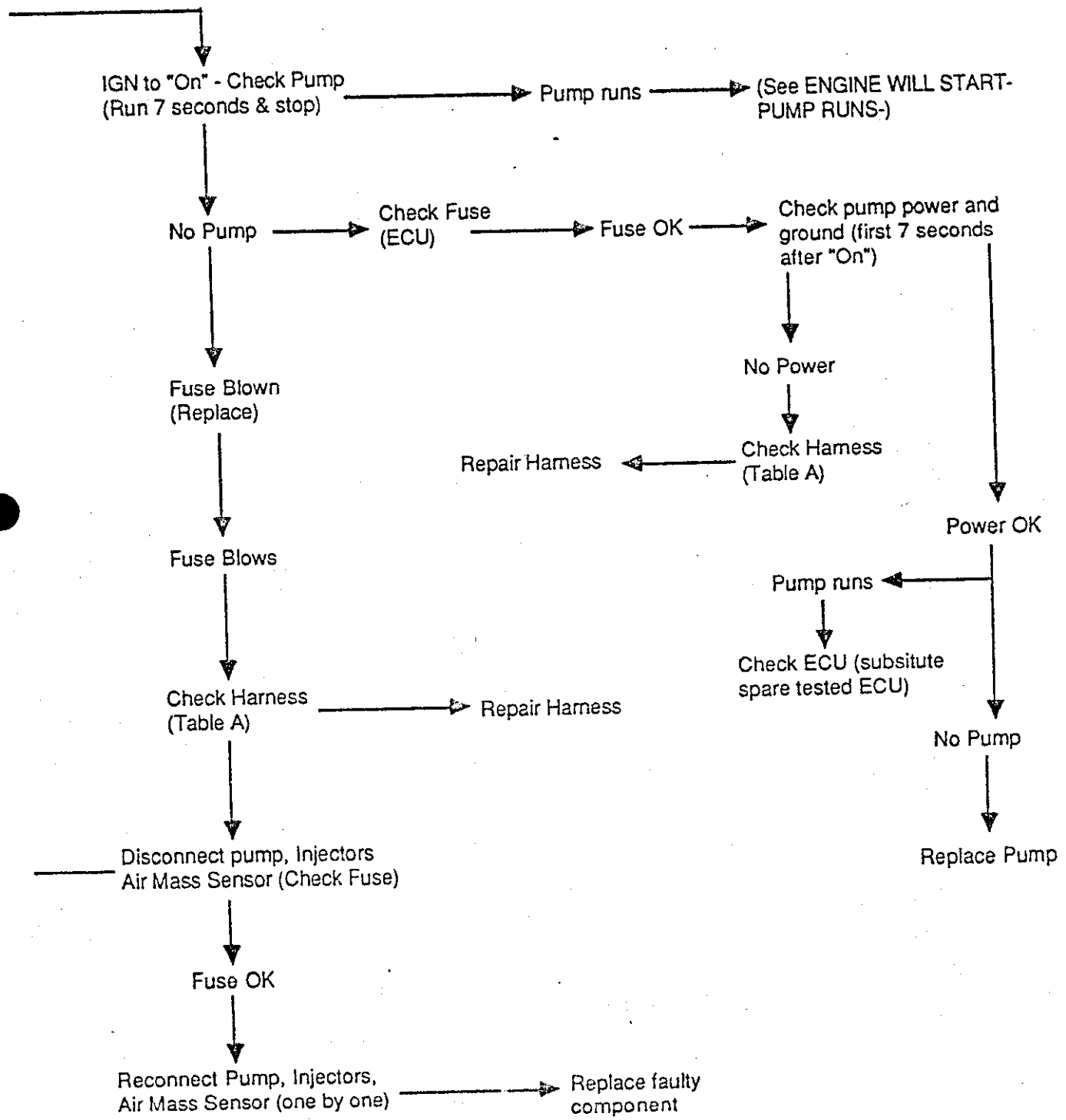

Electronic Fuel Injection
by
AIRSENSORS, INCORPORATED

ENGINE WILL NOT START

PUMP RUNS

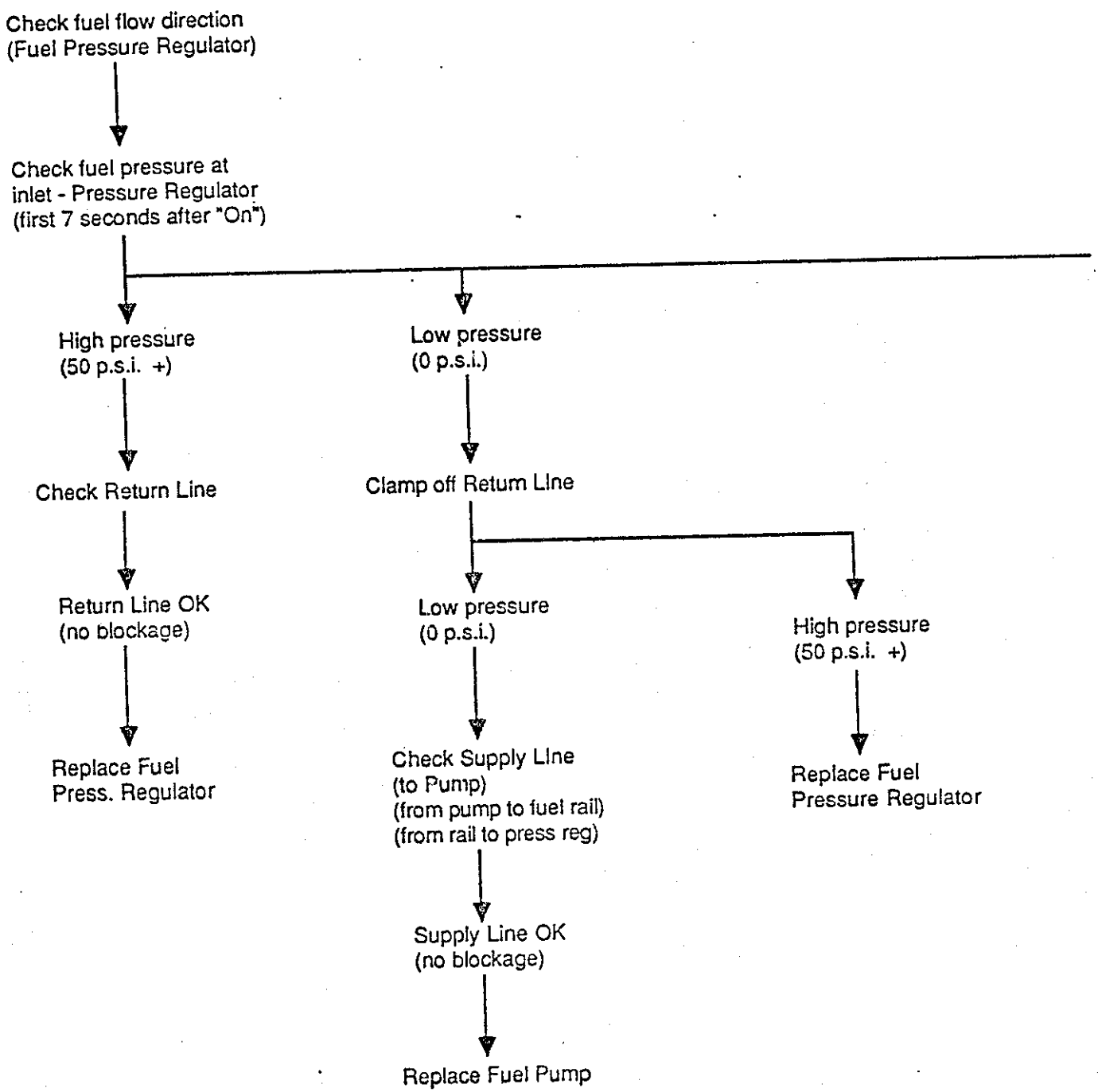

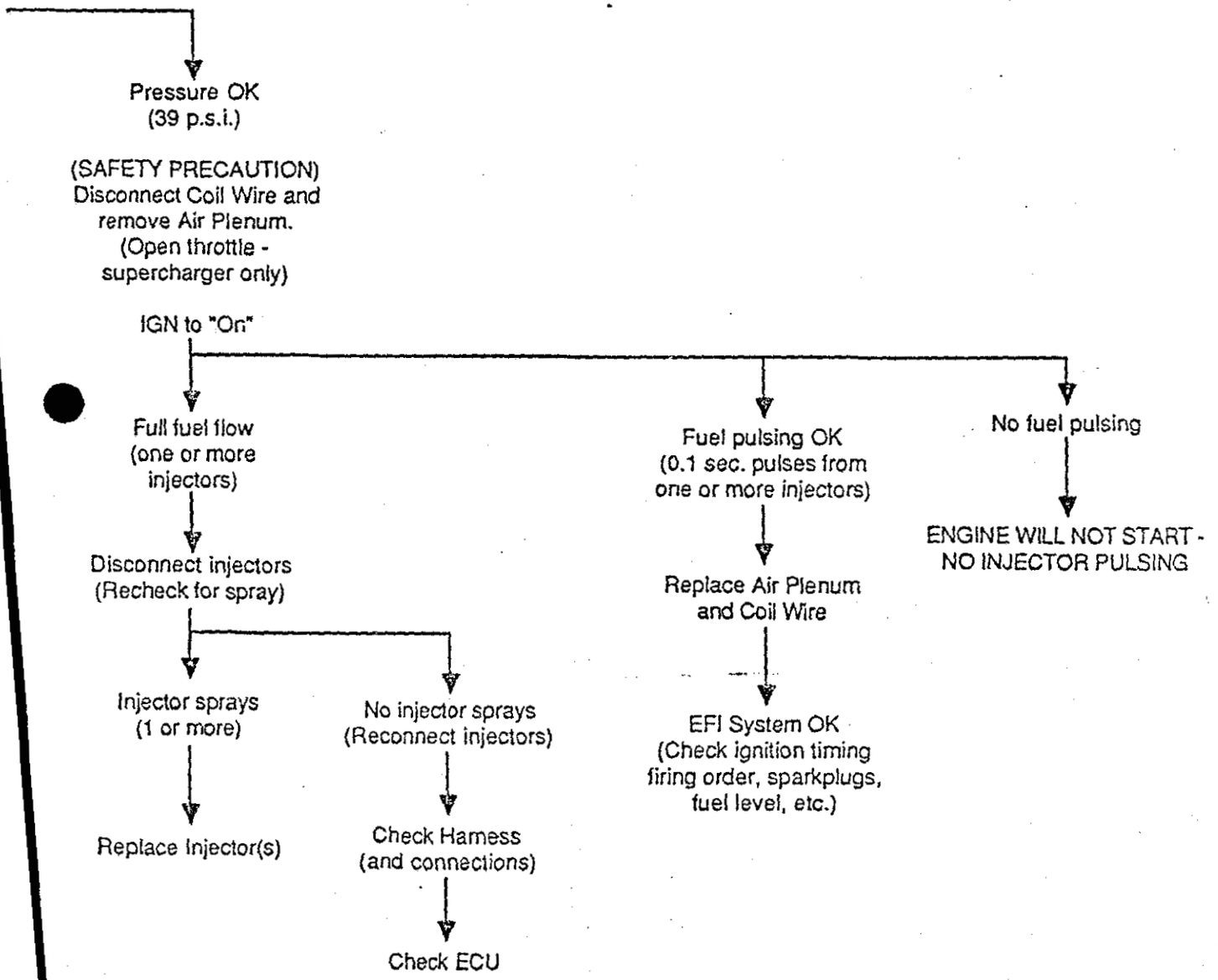
Pressure OK
(39 p.s.i.)
(SAFETY PRECAUTION)
Disconnect Coil Wire and
remove Air Plenum.
(Open throttle -
supercharger only)
IGN to "On"
Full fuel flow
(one or more
injectors)
Disconnect injectors
(Recheck for spray)
Injector sprays
(1 or more)
Replace Injector(s)
No injector sprays
(Reconnect injectors)
Check Harness
(and connections)
Check ECU
Fuel pulsing OK
(0.1 sec. pulses from
one or more injectors)
Replace Air Plenum
and Coil Wire
EFI System OK
(Check ignition timing
firing order, sparkplugs,
fuel level, etc.)
No fuel pulsing
ENGINE WILL NOT START -
NO INJECTOR PULSING

ENGINE WILL NOT START

NO INJECTOR PULSING

WARNING: Futher Testing Requires Extreme Care! There is a potential for fire and/or explosion.

Reconnect Coil Wire and check for valid Tach signal. See TROUBLESHOOTING -QUICK CHECKS (Technical Manual)

Tach signal OK

Check power to injectors (Test light from + battery to colored wire, injector connectors)

No Tach signal

Check Harness and connectors pins and connections to all components

Check ECU

TABLE A

WIRING HARNESS - LEADS AND CONNECTIONS

PLUG Pin No.	WIRE Color	WIRE Gauge	DESTINATION
1	White	14	Battery (+ 12V)
2	Red	16	Fuel PumP (+ 12V)
3	Red	16	All Injectors (+ 12V, splits inside harness for red leads to injectors)
4	Red	16	Fast Idle Air Valve (+ 12V)
5	White	16	Air Mass Sensor (Pin #1, +12V)
6	White	18	Switched Ignition (+ 12V)
7			(Spare)
8			(Spare)
9	Violet	18	Induction Pick-up
10			(Spare)
11	Brown	18	Injector #1
12	Red	18	Injector #2
13	Orange	18	Injector #3
14	Yellow	18	Injector #4
15	Green	18	Coil (negative) Tach signal (4.7K ohms resistor in series within wiring harness cover)
16	Gray	18	Engine Temperature Sensor
17	Red	16	Air Mass Sensor signal (Pin #3)
18			(Spare)
19			(Spare)
20			(Spare)
21	Black	16	Air Mass Sensor ground (Pin #2)
22	Black	14	Battery (Negative)

NOTE: If injector problems occur during troubleshooting, replace all Ram brand injectors with Bosch equivalent.

Check critical electrical connections. (Green Tach lead to Coil (negative), Gray lead to Engine Temp. Sensor-check ground, and Air Mass Sensor connector)

↓

Check Tach lead Resistor (4.7K ohms). (Connect Ohm Meter between disconnected Green Tach lead and Pin #6, ECU connector) Resistor is in lead (between test points) within Wiring Harness covering.

↓

Check for Air Mass Sensor signal validity (Use Troubleshooting-Quick Checks, Technical Manual, procedure. Signal is faulty if LED, middle PC board in ECU, remains lit or flickers on and off during engine operation).

↓

Check against possiblity of major air leaks. (Air plenum, throttlebody/throttleplate, uncapped vacuum ports, intake manifold, supercharger).

↓

Check against restrictions in fuel supply. (Gas tank sock, gas filters, hose pinching).

→ Correct circuitry as required

→ Replace if required. (Do no bypass Resistor if shortening Wiring Harness.)

→ Check continuity, Wiring Harness / AMS Connector

Pin		Pin
#5	to	#1
#21	to	#2
#17	to	#3

→ Repair or replace Wiring Harness.

↓ Replace Air Mass Sensor.

ENGINE RUNS: DRIVEABILITY IMPROVEMENT

(Fine Tuning)

Check validity of Air Mass Sensor signal. (Use Troubleshooting-Quick Checks procedures, Technical Manual). _____

↓

Check Air Filter location against direct air currents. (Direct air currents from engine or alternator fan will produce false air flow signals). _____

↓

Recheck ECU Engine Matching Adjustments. Readjust if inadvertently moved far from adjusted settings or factory settings (at approximately 10 o'clock positions). _____

↓

Check fuel pressure setting. (Road test vehicle with pressure gauge. Fuel rail pressure, 39 p.s.i., no manifold vacuum; 30 p.s.i., 20" manifold vacuum-supercharger). _____

↓

Check against air system leaks and vacuum leaks. _____

↓

Check against faulty injector operation. _____

Replace AMS if LED located at end of the lower middle PC board, ECU, remains on / flashes.

Shield Air Filter or put thin, open cell foam sock on filter.

Readjust using Technical Manual, adjustments.

Correct using Trouble shooting Matrix, ENG. WILL NOT START- PUMP RUNS.

Repair as required

Replace if sticking. (See Note: Table A)

Note: 1. The use of a four-barrel Throttlebody on a two-barrel intake manifold (with adaptor plate), usually results in lower performance and poorer driveability due to "fuel puddling".

2. If engine runs rough at just above idle speed (butterfly valves barely open), check for correct injector connection order at Throttlebody (very important), then move Induction Pick Up Sensor from the #2 cylinder in the firing order to any other spark plug wire. Because of engine wear and manifold design, cylinder balance may be improved by this change.

ENGINE RUNS: FUEL ECONOMY IMPROVEMENT

(Fine tuning)

NOTES

Exhaust gas samples must be taken at inlet to catalytic convertor, if installed. (Drill and tap for 1/8" pipe plug - plug after testing.) Take samples with air pump disabled, hood closed.

Check COLD adjustment against enrichment after engine warms. (Note CO reading at 2500 RPM, no load. Rotate COLD adjustment to full rich and full lean settings, observing CO readings. If no change occurs with warm engine, return COLD to original setting).

COLD enrichment should not function longer than about 10 minutes after starting cold engine.

Check A/F ratio adjustment for engine application. (Set A/F at 1.0% to 1.5% CO at 2500 RPM, no load).

Poor economy can result if A/F adjustment is set too lean. Compensating (excess) throttle opening will cause premature LOAD enrichment. An A/F ratio setting of about 1.0% CO offers best economy.

Check IDLE enrichment operation. (After setting specified idle speed by Throttlebody screw, enrichen IDLE adjust for smooth operaton).

Poor economy can occur under stop and go driving if IDLE adjust set too rich. Smooth lean idle is best.

Check LOAD enrichment operation. (On dyno or under applied road load to hold RPM to 2500 to 3000 at half throttle, lean LOAD adjust to "sag" condition and enrichen slightly to no "sag").

Poor economy can result if LOAD adjustment is set too rich. Best if enrichened no more than 6.0% CO at maximum load.

Check ACCEL enrichment operation. (Under quick acceleration conditions, enrichen ACCEL adjustment just enough to eliminate "stumble").

Poor economy not likely to result from excessive ACCEL adjustment if driveability is OK. Reduce enrichment if black exhaust "puff" occurs during quick acceleration.

EFI System operation OK. Check:
Distributor curve.
Engine timing.
Vacuum advance.
Etc.

Note: The use of a four-barrel Throttlebody on a two-barrel intake manifold (with adaptor plate), usually results in lower performance and reduced fuel economy due to "fuel puddling".

If CO reading varies, as COLD adjustment is rotated, relocate Engine Temperature Sensor to a warmer location on intake manifold or replace Sensor if not functioning. (Resistance of Sensor should increase from about 2K ohms at 20 degrees F to more than 100K ohms at 180 F.)

If CO reading are not steady, shield or relocate Air Mass Sensor to eliminate strong air currents from fan, alternator, etc. from striking Air Filter. The AMS will erroneously "read" air puffs as mass flow. If unable to attain proper CO reading, check fuel pressure using Troubleshooting Matrix, ENGINE WILL NOT START; PUMP RUNS.

Set at 3.0% CO or best lean idle. This reading will vary with engine design and condition.

If, under steady, level driving conditions at 2500 RPM, a CO change occurs when adjusting LOAD, contact I & P Technician for directions to rescale load cut-in point.

After eliminating "stumble", lean back until "stumble" reoccurs and then enrichen as lightly as possible to eliminate "stumble".

SECTION IV

GENERAL INFORMATION

FACTORY SERVICE

There are internal adjustments and certain minor modifications which can be made within the ECU to adapt some systems for special applications. These must be made at the factory or by factory-trained technicians authorized by AirSensors to perform this service. A minimum fee of $25.00 per ECU unit will be charged for this service.

All products to be returned for servicing, within or out of Warranty, must be authorized for return and a return authorization number issued by phone by an Installation and Performance Technician. All service work on AirSensors product will be performed by AirSensors' Seattle facility or its Authorized Agents.

PRODUCT DESCRIPTIONS

Product Descriptions for current and near production AirSensors Electronic Fuel Injection Systems for aftermarket use are provided in Section V, APPENDIX.

STANDARD ELECTRONIC FUEL INJECTION KITS

Parts Lists for STANDARD EFI KITS indicating AirSensors part numbers for current and near production Electronic Fuel Injection Systems and system components are provided in Section V, APPENDIX.

WARRANTY

A copy of the standard product Warranty offered by AirSensors, is provided in Section V, APPENDIX.

SECTION V

APPENDIX

PRODUCT DESCRIPTIONS

CURRENT

Model N-8A; V-8, Chevy 305/350, normally aspirated
Model N-8A-HD; V-8, Chevy 454, normally aspirated

NEAR PRODUCTION

Model N-8B; V-8, Chevy 305/350, NA, EGO sensing
Model N-8C; V-8, Chevy 454, NA, EGO sensing
Model N-6B; V-6, Chevy 2.8L, NA, EGO sensing

EFI KITS: PARTS LISTS

Model N-8A
Model N-8A-HD

WARRANTY

End User

(N8A.PD)

PRODUCT DESCRIPTION
MODEL N-8A

PRODUCT:	EFI System, Single Point, 4 Injector, Normally Aspirated.
MODEL NUMBER:	Model N-8A
PART NUMBER:	I0569-001

PURPOSE

To retrofit gasoline-fueled automotive internal combustion engines with electronic fuel injection. Designed expressly for use with normally aspirated engines and existing emission controls. System provides improved performance and driveability.

APPLICATION

Pre-1981 autos with manual transmissions and normally aspirated 305 or 350 Chevrolet V-8 engines. Is also applicable to other manual or automatic transmission-equipped pre-1981 autos with normally aspirated V-8 engines limited to cylinder displacements ranging from 262 to 400 cubic inches (4.3 to 6.5 liters) when fitted with appropriate accessory and linkage modifications (not supplied).

DESCRIPTION

Model N-8A is a custom-engineered EFI system designed to replace a conventional carburetor and to be used with a normally aspirated engine. The system consists of a proprietary air mass sensor, air filter, air plenum, clear-anodized aluminum four-barrel throttlebody with butterfly valves and fitted with a fuel rail system and four fuel injectors, an electric fuel pump, fuel pressure regulator, primary and secondary fuel filters, engine temperature sensor, ignition synchronizer, electronic control unit, wiring harness and various installation parts.

The system is controlled by an analog control unit which processes incoming signals representing engine temperature, rotational velocity (RPM) and intake air mass flow. It computes the fuel-to-air ratio appropriate for engine operating conditions and generates a signal controlling the injectors to supply the computed fuel flow. Adjustments for matching the EFI system to the specific engine application include: Main air-to-fuel mixture; Idle enrichment; Load enrichment; Cold enrichment; Acceleration enrichment and Drive home (loss of air signal) air-fuel ratio control.

PRODUCT DESCRIPTION (Continued)
Model N-8A

SPECIFICATION

See AirSensors Drawing Number 10569, related drawings, specifications and parts list.

OTHER

Systems are packaged in lots of one and contain all parts for primary application indicated above.

(N8AHD.PD)

PRODUCT DESCRIPTION
MODEL N-8A-HD

PRODUCT:	EFI System, Single Point, 4 Injector, Normally Aspirated, Heavy Duty.
MODEL NUMBER:	Model N-8A-HD
PART NUMBER:	I0651-005

PURPOSE

To retrofit gasoline-fueled automotive internal combustion engines with electronic fuel injection. Designed expressly for use with normally aspirated engines and existing emission controls. System provides improved performance and driveability.

APPLICATION

Heavy duty vehicles, exceeding 8,500 pound GVW, with automatic transmission and normally aspirated 454 Chevrolet V-8 engines. Is also applicable to other heavy duty vehicles with normally aspirated V-8 engines limited to similar displacements ranging from 400 to 500 cubic inches (6.4 to 8.2 liters) when fitted with appropriate accessory and linkage modifications and brackets, no supplied.

DESCRIPTION

Model N-8A-HD is a custom-engineered EFI system designed to replace a conventional carburetor and to be used with a normally aspirated engine. The system consists of a proprietary air mass sensor, air filter, air plenum, clear-anodized aluminum four-barrel throttlebody with butterfly valves and fitted with a fuel rail system and four fuel injectors, an electric fuel pump, fuel pressure regulator, primary and secondary fuel filters, engine temperature sensor, ignition synchronizer, electronic control unit, wiring harness and various installation parts.

The system is controlled by an analog control unit which processes incoming signals representing engine temperature, rotational velocity (RPM) and intake air mass flow. It computes the fuel-to-air ratio appropriate for engine operating conditions and generates a signal controlling the injectors to supply the computed fuel flow. Adjustments for matching the EFI system to the specific engine application include: Main air-to-fuel mixture; Idle enrichment; Load enrichment; Cold enrichment; Acceleration enrichment and Drive home (loss of air signal) air-fuel ratio control.

PRODUCT DESCRIPTION (Continued)
Model N-8A-HD

SPECIFICATION

See AirSensors Drawing Number 10569, related drawings, specifications and parts list.

OTHER

Systems are packaged in lots of one and contain all parts for primary application indicated above.

(N8B.PD)

PRODUCT DESCRIPTION
MODEL N-8B

PRODUCT:	EFI System, Single Point, 4 Injector, Normally Aspirated
MODEL NUMBER:	Model N-8B
PART NUMBER:	10569-003

PURPOSE

To retrofit gasoline-fueled automotive internal combustion engines with electronic fuel injection. Designed expressly for use with normally aspirated engines and existing emission controls. System provides improved performance and driveability.

APPLICATION

Pre-1985 autos with manual transmissions and normally aspirated 305 or 350 Chevrolet V-8 engines. Is also applicable to other manual or automatic transmission-equipped pre-1985 autos with normally aspirated V-8 engines limited to cylinder displacements ranging from 262 to 400 cubic inches (4.3 to 6.5 liters) when fitted with appropriate accessory and linkage modifications (not supplied).

DESCRIPTION

Model N-8B is a custom-engineered EFI system designed to replace a conventional carburetor and to be used with a normally aspirated engine. The system consists of a proprietary air mass sensor, air filter, air plenum, clear-anodized aluminum four-barrel throttlebody with butterfly valves and fitted with a fuel rail system and four fuel injectors, and electric fuel pump, fuel pressure regulator, primary and secondary fuel filters, engine temperature sensor, ignition synchronizer, electronic control unit, wiring harness and various installation parts.

The system is controlled by an analog control unit which processes incoming signals representing engine temperature, rotational velocity (RPM), intake air mass flow and the oxygen content of the exhaust gas flow. It computes the fuel-to-air ratio appropriate for engine operating conditions and generates a signal controlling the injectors to supply the computed fuel flow. Adjustments for matching the EFI system to the specific engine application include: Main air-to-fuel mixture; Idle enrichment; Load enrichment; Cold enrichment; Acceleration enrichment and Drive home (loss of air signal) air-fuel ratio control.

(Continued)

PRODUCT DESCRIPTION (Continued)
MODEL N-8B

SPECIFICATION

See AirSensors Drawing Number 10569, related drawings, specifications and parts list.

OTHER

Systems are packaged in lots of five and contain all parts for primary application indicated above.

(N8C.PD)

PRODUCT DESCRIPTION
MODEL N-8C

PRODUCT: EFI System, Single Point, 4 Injector, Normally Aspirated
MODEL NUMBER: Model N-8C
PART NUMBER: 10651-003

PURPOSE

To retrofit gasoline-fueled automotive internal combustion engines with electronic fuel injection. Designed expressly for use with normally aspirated engines and existing emission controls. System provides improved performance and driveability.

APPLICATION

Pre-1981 autos with manual transmissions and normally aspirated 454 Chevrolet V-8 engines. Is also applicable to other manual or automatic transmission-equipped pre-1981 autos with normally aspirated V-8 engines limited to cylinder displacements ranging from 396 to 454 cubic inches (6.4 to 7.5 liters) when fitted with appropriate accessory and linkage modifications (not supplied).

DESCRIPTION

Model N-8C is a custom-engineered EFI system designed to replace a conventional carburetor and to be used with a normally aspirated engine. The system consists of a proprietary air mass sensor, air filter, air plenum, clear-anodized aluminum four-barrel throttlebody with butterfly valves and fitted with a fuel rail system and four fuel injectors, an electric fuel pump, fuel pressure regulator, primary and secondary fuel filters, engine temperature sensor, ignition synchronizer, electronic control unit, wiring harness and various installation parts.

The system is controlled by an analog control unit which processes incoming signals representing engine temperature, rotational velocity (RPM), intake air mass flow and the oxygen content of the exhaust gas flow. It computes the fuel-to-air ratio appropriate for engine operating conditions and generates a signal controlling the injectors to supply the computed fuel flow. Adjustments for matching the EFI system to the specific engine application include: Main air-to-fuel mixture; Idle enrichment; Load enrichment; Cold enrichment; Acceleration enrichment and Drive home (loss of air signal) air-fuel ratio control.

(Continued)

PRODUCT DESCRIPTION (Continued)
MODEL N-8C

SPECIFICATION

See Airsensors Drawing Number 10651, related drawings, specifications and parts list.

OTHER

Systems are packaged in lots of five and contain all parts for primary application above.

(N6B.PD)

PRODUCT DESCRIPTION
MODEL N-6B

PRODUCT:	EFI System, Single Point, 2 Injector, Normally Aspirated
MODEL NUMBER:	Model N-6B
PART NUMBER:	10680-001

PURPOSE

To retrofit gasoline-fueled automotive internal combustion engines with electronic fuel injection. Designed expressly for use with normally aspirated engines and existing emission controls. System provides improved performance and driveability.

APPLICATION

Pre-1985 autos with manual transmissions and normally aspirated 2.8L Chevrolet V-6 engines. Is also applicable to other manual or automatic transmission-equipped pre-1985 autos with normally aspirated V-6 engines limited to cylinder displacements ranging from 140 to 200 cubic inches (2.3 to 3.2 liters) when fitted with appropriate accessory and linkage modifications (not supplied).

DESCRIPTION

Model N-6B is a custom-engineered EFI system designed to replace a conventional carburetor and to be used with a normally aspirated engine. The system consists of a proprietary air mass sensor, air filter, air plenum, clear-anodized aluminum two-barrel throttlebody with butterfly valves and fitted with a fuel rail system and two fuel injectors, an electric fuel pump fuel pressure regulator, primary and secondary fuel filters, engine temperature sensor, ignition synchronizer, electronic control unit, wiring harness and various installation parts.

The system is controlled by an analog control unit which processes incoming signals representing engine temperature, rotational velocity (RPM), intake air mass flow and the oxygen content of the exhaust gas flow. It computes the fuel-to-air ratio appropriate for engine operating conditions and generates a signal controlling the injectors to supply the computed fuel flow. Adjustments for matching the EFI system to the specific engine application include: Main air-to-fuel mixture; Idle enrichment; Load enrichment; Cold enrichment; Acceleration enrichment and Drive home (loss of air signal) air-fuel ratio control.

(Continued)

PRODUCT DESCRIPTION (Continued)
MODEL N-6B

SPECIFICATION

See AirSensors Drawing Number 10680, related drawings, specifications and parts list.

OTHER

Systems are packaged in lots of five and contain all parts for primary application indicated above.

AirSensors, Inc.

MODEL N-8A-HD EFI KIT - PARTS LIST
(Kit Part Number 10651-005)

Item		Part Number	Quantity
	THROTTLEBODY COMPONENTS		
1	Throttlebody Assembly	10753-000	1
2	Cap, Vacuum Port, 1/8"	10265-000	2
3	Cap, Vacuum Port, 1/4"	10760-000	1
4	Hose, Vacuum, 5/32"	10896-000	2 ft.
5	Bolt, T-body, Hex 5/16"-18	10209-040	4
6	Washer, T-body, Flat, 5/16" ID	10205-011	4
	GASKETS		
7	Gasket, T-body/Adapter	10894-000 B	1
8	Gasket, Air Plenum/Wing Nut	10953-000	1
9	Gasket, T-body/Manifold	10952-000	1
	FUEL COMPONENTS		
10	Filter, Fuel, Primary	10570-000 A	1
11	Filter, Fuel, Secondary	10224-000	1
12	Pump, Fuel, Electric	10759-000	1
13	Regulator, Fuel, Vacuum Con	10235-002	1
14	Bracket, Fuel Pump	10965-000	1
15	Hose, Fuel, Supply, 3/8" ID	10237-001	6 ft.
16	Hose, Fuel, Supply, 7/16" ID	10971-001	1 ft.
17	Hose, Fuel, Supply, 5/16" ID	10971-000	2 ft.
18	Hose, Fuel, Return 1/4" ID	10237-000	4 ft.
19	Hose Union,Fuel Hose, 5/16"/3/8"	10972-000	1
20	Hose Union,Fuel Hose, 5/16"-1/4"	10972-001	1
21	Clamp, Fuel Hose	10936-002	12
	AIR COMPONENTS		
22	Filter Assembly, Air, 4"	10221-000 A	1
23	Bracket, Air Filter	10966-000	1
24	Air Mass Sensor, 4"	10743-000 A	1
25	Air Plenum Assembly, 4"	11042-000	1
26	Bail, T-body/Air Plenum	10160-001	1
27	Wing Nut, 1/4"-20	10662-002	1
28	Washer, Wing Nut, Flat, 1/4" ID	10205-010	1
29	Jam Nut, 1/4"-20	10174-101	1
30	Hose, Flex, 4" ID x 14" L	10247-000	1
31	Clamp, Air Hose, 4"	10936-011	2
	ELECTRONIC COMPONENTS		
32	ECU, 4 Inj, Model E-4A	10572-005 A	1
33	Engine Temperature Sensor	10411-000	1
34	Inductive Pickup Sensor	10409-000 A	1
35	Harness, ECU, 4 Inj	10415-000	1
36	Grommet, Rubber, Firewall	10260-000 A	1
37	Ground Lead, Fuel Pump	10408-001	1
38	Tie, Ty-rap, 3.62" L	10151-000	24
39	Tie, Ty-rap, 8" L	10151-002	6
	DOCUMENTS		
40	Technical Manual	50042-000	1
41	Installation Report	50043-000	1
42	Product Literature	50044-000	1
43	Window Decal	50046-000	1

(WARRANTY.ASI)

LIMITED WARRANTY

AIRSENSORS WARRANTS:

That each item of mechanical or electrical equipment sold or supplied as part of AirSensors electronic fuel injection systems is warranted for 90 days from the date of sale to the end user, against defects in materials and workmanship.

THESE ARE THE ONLY WARRANTIES MADE AND ALL OTHER WARRANTIES OF FITNESS, MERCHANTABILITY, OR SUITABILITY FOR A PARTICULAR PURPOSE ARE SPECIFICALLY DISCLAIMED. IN NO EVENT SHALL ANY IMPLIED WARRANTIES REMAIN IN EFFECT AFTER THE 90 DAY TERM OF THIS EXPRESS WARRANTY. ANY EXTENSION OF WARRANTY MUST BE APPROVED BY AIRSENSORS IN WRITING.

Some States do not allow limitations on how long an implied warranty lasts.

AIRSENSORS DOES NOT WARRANT:

* Products which have been modified beyond manufacturer's recommendations.
* Products which have been subject to misuse, abuse, or accident.
* Products which have been improperly installed.
* Products which have been subjected to improper fuel or to fuel containing dirt, gum, water, or other contaminants.
* Products which have been damaged due to excessive high voltage.
* Products used for racing.

LIMITATION OF REMEDY TO PARTS AND LABOR:

During the warranty period, AirSensors will provide the parts and labor necessary to repair any warrantable defects.

If warranty work or repair parts are required, they will normally be provided by the facility when the system was installed; or contact AirSensors at the address below for information on obtaining warranty service.

(Continued)

LIMITED WARRANTY (Continued)

AIRSENSORS LIMITS ITS LIABILITY TO THE COSTS OF REPAIR AS DESCRIBED ABOVE AND THESE REMEDIES ARE EXCLUSIVE.

AIRSENSORS DISCLAIMS ALL LIABILITY FOR INCIDENTAL AND CONSEQUENTIAL DAMAGES INCLUDING BUT NOT LIMITED TO LOSS OF TIME, LOSS OF USE, INCONVENIENCE OR EXPENSE ARISING FROM LOSS OF TIME OR USE, LOSS OF PROFITS AND ALL OTHER CONSEQUENTIAL DAMAGES RESULTING FROM THE USE OF THIS PRODUCT.

This is the only warranty offered by AirSensors applicable to its electronic fuel injection system. This warranty provides specific legal rights; other rights vary from state to state. Some states do not allow the exclusion or limitation of incidental or consequential damages. Initial warranty determinations will be made by AirSensors.

AirSensors, Inc.
708 Industry Drive
Seattle, Washington 98188

(206) 228-6200

TURBONETICS, INC.
MODEL 454TCI-HD
TURBOCHARGER SYSTEM
CARB E.O. NO. D-XX

Test Program for Add-On Turbocharger Kits for Heavy-Duty Engines

Testing will consist of back-to-back chassis dynamometer tests. Baseline (unmodified configuration) emission results will be compared to turbocharged (modified configuration) emission results on the same vehicle.

A. STEADY STATE TESTS

1) Idle

2) 20, 30, 40, 50 and 55 mph at 1XRL.

Prior to measuring exhaust emission at any steady state test point, the vehicle's engine temperature shall be stabilized. This is satisfied when engine oil temperature is stabilized as monitored and indicated by a temperature recorder.

If a steady state point is unattainable in the baseline configuration, then the last point at a specified horsepower should be WOT and the speed should be recorded. The test in the turbocharged configuration will be performed at the same speeds and horsepower as the baseline configuration.

Any steady state may be deleted if 1) the steady state exceeds or can be expected to exceed the engine redline or 2) steady state conditions might cause serious damage to vehicle components or dynamomter, or create a hazard for test personnel.

B. STEADY STATE DATA REQUIREMENTS

1) CO concentration

2) CO_2 concentration

3) HC concentration (by HFID)

4) NOx concentration

5) engine rpm

6) engine oil temperature

C. MISCELLANEOUS

1) The same fuel will be used for both the unmodified and modified configurations unless the turbocharger manufacturer's written instructions specify a different fuel for the turbocharged configuration.

4875L/0182A

2) Tire pressure in the drive wheels will be the maximum indicated on the tire sidewall.

3) Test vehicles from secondary manufacturers may be tested without a body shell if 1) the cab is intact, 2) the vehicle is legally driveable on the street, 3) the frontal area is identical to the built-up vehicle, 4) the chassis is loaded to a weight simulating loaded vehicle weight. Loaded vehicle weight is defined as the manufacturer's estimated weight of the vehicle in operational status with all standard equipment, the weight fuel at nominal tank capacity, and the weight of optional equipment.