State of California
AIR RESOURCES BOARD

Executive Order G-70-36-AB
Relating to Modification of Certification
of the OPW Balance Phase II
Vapor Recovery System

WHEREAS, the Air Resources Board (the "Board") has established, pursuant to Sections 39600, 39601, and 41954 of the Health and Safety Code, certification procedures for systems designed for the control of gasoline vapor emissions during motor vehicle fueling operations ("Phase II vapor recovery systems") in its "Certification Procedures for Gasoline Vapor Recovery Systems at Service Stations" as last amended December 4, 1981 (the "Certification Procedures"), incorporated by reference in Section 94001 of Title 17, California Administrative Code;

WHEREAS, the Board has established, pursuant to Sections 39600, 39601, and 41954 of the Health and Safety Code, test procedures for determining compliance of Phase II vapor recovery systems with emission standards in its "Test Procedures for Determining the Efficiency of Gasoline Vapor Recovery Systems at Service Stations" as last amended September 1, 1982 (the "Test Procedures"), incorporated by reference in Section 94000 of Title 17, California Administrative Code;

WHEREAS, Dover Corporation/OPW Division ("OPW") has applied for certification of the OPW 11V Model F vapor recovery nozzle, Model 119A valve actuator and Model 119B vapor check valve for use with the Balance Phase II vapor recovery systems;

WHEREAS, Section VIII-A of the Certification Procedures provides that the Executive Officer shall issue an order of certification if he or she determines that a vapor recovery system conforms to all of the requirements set forth in Sections I through VII;

WHEREAS, I find that coaxial vapor recovery hoses when used with OPW balance Phase II vapor recovery systems result in an improvement to the performance of the systems; and

WHEREAS, I find that the OPW 11V Model F coaxial vapor recovery nozzle, Model 119A valve actuator and Model 119B vapor check valve when used with the Balance Phase II vapor recovery system at all new and existing installations conform with all the requirements set forth in Sections I through VII of the Certification Procedures.

NOW THEREFORE, IT IS HEREBY ORDERED that the certification, Executive Order G-70-36-AA, issued on August 22, 1983 is hereby modified to add the OPW 11V Model F vapor recovery nozzle, Model 119A valve actuator and Model 119B vapor check valve for use with the OPW Balance Phase II vapor recovery system.

IT IS FURTHER ORDERED that where an OPW balance type vapor recovery system is to be installed at a new installation only the OPW balance type coaxial vapor recovery nozzles and coaxial hose configurations may be used.

IT IS FURTHER ORDERED that this system is certified to be at least 95 percent effective in the self-serve and/or attendant use at gasoline service stations when used with a Board certified Phase I vapor recovery system. Typical piping arrangements for this system are described in Exhibits 1 and 2. All certified components are listed in the latest revision of Executive Order G-70-52.

IT IS FURTHER ORDERED that the OPW 11V Model F vapor recovery nozzle, Model 119A valve actuator and Model 119B vapor check valve shall be installed as shown in Exhibit 3.

IT IS FURTHER ORDERED that the compliance with the applicable certification requirements and rules and regulations of the Division of Measurement Standards, the Office of the State Fire Marshal, and the Division of Occupational Safety and Health of the Department of Industrial Relations is made a condition of this certification.

IT IS FURTHER ORDERED that the components certified hereby shall perform in actual use with the same effectiveness as the certification test system.

IT IS FURTHER ORDERED that any alteration of the equipment, parts, design, or operation of the configurations certified hereby, is prohibited, and deemed inconsistent with this certification, unless such alteration has been approved by the undersigned or the Executive Officer's designee.

IT IS FURTHER ORDERED that all nozzles approved for use with the Phase II vapor recovery systems specified in this Executive Order shall be 100 percent performance checked at the factory including checks of proper functioning of all automatic shut-off mechanisms.

Executed at Sacramento, California this 20th day of February 1986.

James D. Boyd
Executive Officer

EXHIBIT I
Executive Order G-70-35-AB
OPW Balance Phase II
Vapor Recovery System
Manifolded Vapor Return Lines

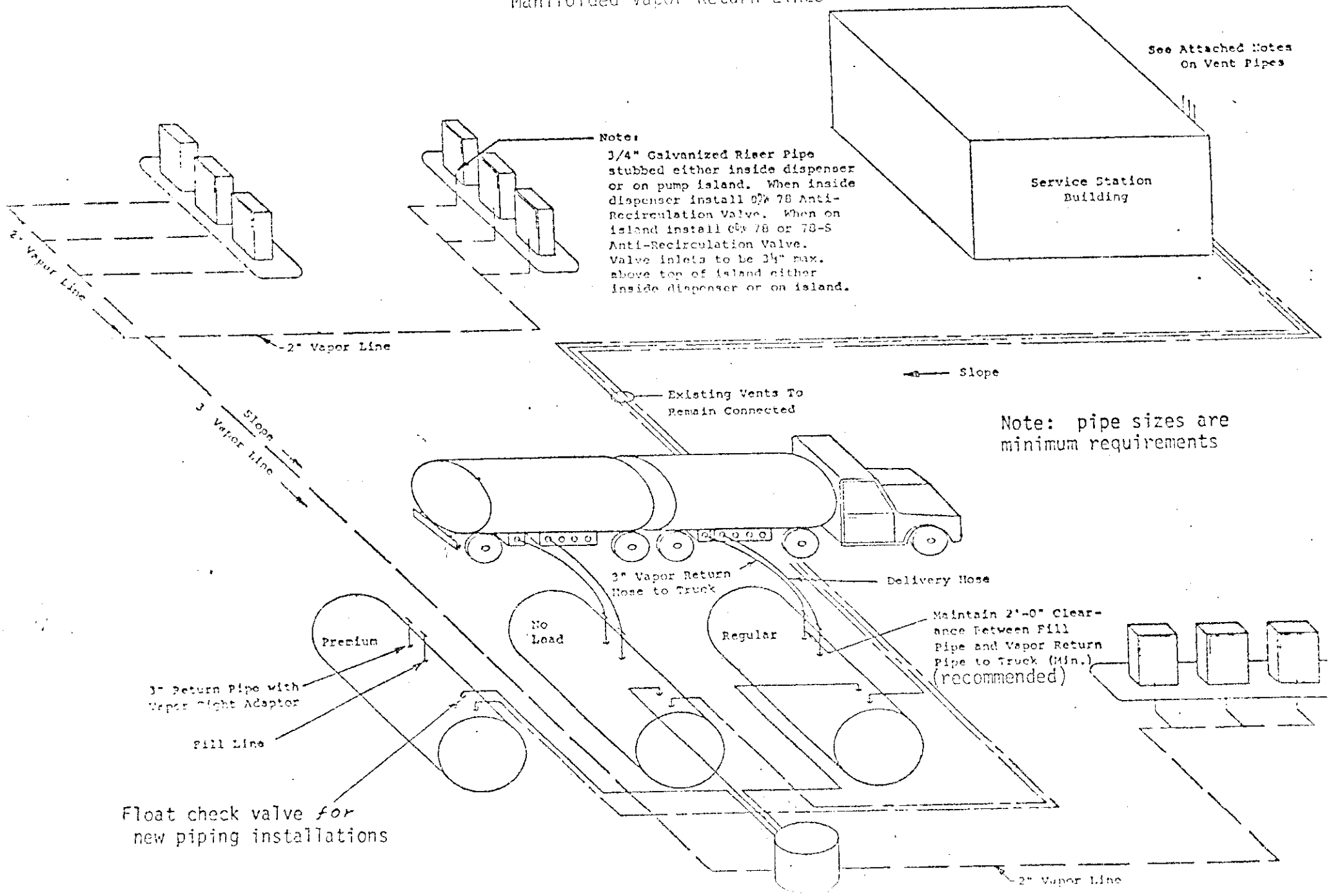

EXHIBIT 2

Executive Order G-70-36-AB
OPW Balance Phase II
Vapor Recovery System
Individual Vapor Return Lines

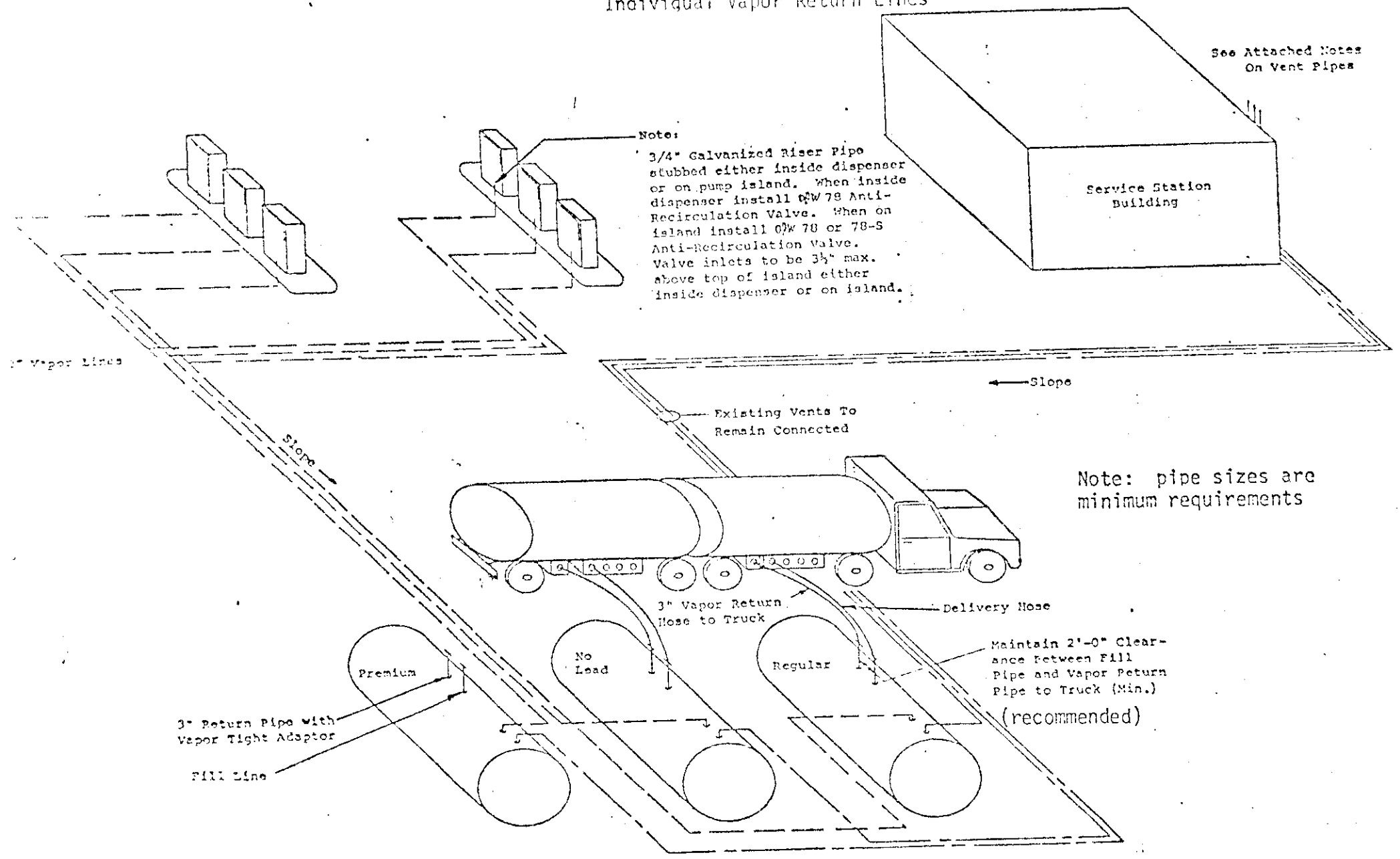

EXECUTIVE ORDER G-70-36-AB

NOTES TO ACCOMPANY EXHIBITS 1 AND 2

1. For non-retail outlets which fuel special vehicles, the installation of vapor recovery hoses longer than specified in the latest version of Executive Order G-70-52 are allowed if the following conditions are met:

   a. The non-retail outlet fuels special vehicles such as large trucks, large skip loaders, off-the-road equipment, etc., where reaching the fill pipe requires longer hoses.

   b. The vapor return hoses are arranged to be self-draining or provisions are made to drain the hoses after each refueling or the system incorporates an approved liquid blockage detection system arranged to cease dispensing when a blockage occurs.

   c. The Executive Officer of the Air Resources Board or his/her designee has approved the plans for compliance with condition b.

2. The maximum allowable pressure drop through a system including nozzle, vapor hose, swivels, and underground piping is:

   a. 0.15 inch water at a flow of 20 CFH;

   b. 0.45 inch water at a flow of 60 CFH;

   c. 0.95 inch water at a flow of 100 CFH.

   A pressure drop test must be conducted with the drybreak to the underground tank open.

3. The vent pipes and vent manifold shall be adequately supported throughout their length and when they are supporting weights in addition to their own, additional supports may be required, such as anchoring to a building or other structure.

4. All vapor return and vent piping shall be equipped with swing joints at the base of the riser to each dispensing unit, at each tank connection, and at the base of the vent riser where it fastens to a building or other structure. When a swing joint is used in a riser containing a shear section, the riser must be rigidly supported.

5. Float check valves (or alternate equipment, design, or operating procedures acceptable to the Air Resources Board) are required for all underground manifold piping to prevent contamination of unleaded gasoline with leaded gasoline, via vapor recovery piping, during underground storage tank loading or overfill.

EXHIBIT 3
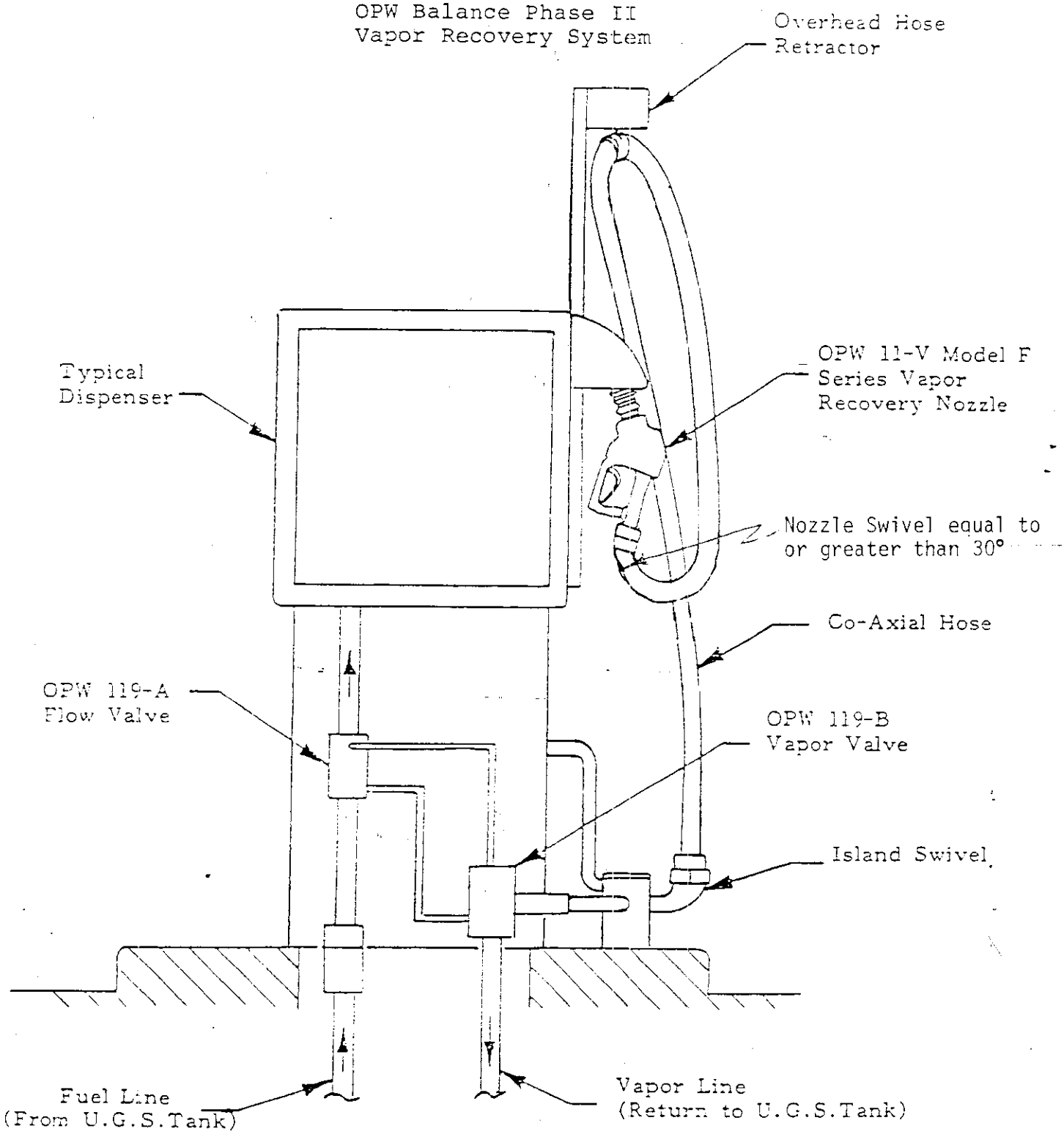
Executive Order G-70-36-AB
OPW Balance Phase II
Vapor Recovery System