INSTALLATION INSTRUCTIONS for HEALY SYSTEMS, INC. CLEAN AIR SEPARATOR

The Model 9961 or 9961H, Healy Systems Clean Air Separator (CAS) consists of a 400 gallon steel vapor processor vessel that contains a fuel resistant bladder to hold excess gasoline vapors that may develop in gasoline storage tanks during idle periods of gasoline dispensing facility operation. Models and Drawings with a “H” suffix apply to horizontal CAS installations and those without a “H” suffix apply to vertical CAS installations. The CAS assembly weighs approximately 800 pounds which makes it necessary to have a power assisted lifting device available at the installation site to remove the CAS from the transportation vehicle and place it on the required concrete pad (see drawing 9900-9945 or 9900-9945H). The pad (level within 1/8”/foot) is located within 100 feet to the gasoline storage tank vent lines. The pad is a requirement of this installation. DO NOT PLACE THE CLEAN AIR SEPARATOR DIRECTLY ON THE GROUND OR ASPHALT SURFACE. NOTICE: The installer is responsible to ensure that the installation meets the latest edition requirements of NFPA 30A, Chapter 10. No electrical connections are required. The CAS securement method shown in drawing 9900-9945 or 9900-9945H shall be approved by the local authority having jurisdiction with respect to wind and seismic loading. Installer shall not loosen, rotate or remove factory installed fittings or flange as this may damage factory seals and void warranty.

In addition to the vapor processor vessel, there is a hardware kit that contains the following:

- 4 Locking 1” NPT Ball Valves
- 4 Pad locks (keyed alike)
- 1 Breather Assembly, Healy Model 9948
- 1 Float Check Valve Assembly, Model 9466G

Reference the appropriate Healy Systems installation drawing (9900-9942, 9900-9942H, 9900-9971, 9900-9971H, 9900-9972, 9900-9972H, 9900-9973 or 9900-9973H of this manual) for placement of the above parts for the vent stack configuration required by the local Authority Having Jurisdiction (AHJ) for the Underground Storage Tank (UST) system. The local contractor is responsible to provide all necessary, galvanized piping, non-hardening, UL classified pipe joint compound and plumbing fittings. Additional Pressure/Vacuum (P/V) vent valves to complete installation are not included in the hardware kit. Healy is not responsible for the warranty of any other P/V vent valve purchased to complete installation.

The CAS arrives at the site assembled and tested. All plumbing shall be done using 1” galvanized steel pipe (Schedule 40) and approved nipples, as called out in the installation drawing appropriate for the site installation. Mounting hardware shall be galvanized or stainless steel. Careful attention must be paid to the installation drawing appropriate for the site installation to assure proper operation of the bladder system. Do not inflate the bladder assembly after installation.

It is important that the CAS be secured to the concrete pad as shown in drawing 9900-9945 or 9900-9945H of this manual to prevent any unintentional repositioning of the CAS as the connecting plumbing to the vent system is accomplished.

OPERATION AND PURGING

NORMAL OPERATION:

- There are four ball valves on the CAS. Each ball valve is to be installed so as to allow opening and closing with nothing obstructing the full range (90°) of movement. In normal operation, only the valve (A) at the top of the CAS shall be open – the other three valves (B, C and D) shall be closed. All four valves shall be locked in the above positions. The two plugs (E and F) should be installed using a non-hardening, UL classified pipe joint compound and tightened to 60 ft-lbs.

DRAINING THE BLADDER:

- Any liquid coming over from the vent system would have collected above the valve (A) in the riser pipe before going into the bladder. An inspection of the need to drain the bladder is easily made by removing the plug (E) at the tee on the bottom plumbing of the CAS. Before removing this plug, open the valve (B) above the tee to release any liquid into the piping below. Wait approximately 30 seconds and then close the valve (B). Now, remove the plug (E) at the tee on the bottom plumbing of the CAS – be sure to have a container suitable for gasoline available to catch fluid. If liquid in excess of 16 ounces (473 ml) drains out, the bladder should also be drained.

- Should it be necessary to drain the bladder:
    1. Close the upper ball valve (A) (usually open) leading to the gasoline storage tank vent lines.
    2. Open the valve (C) that goes to the internal syphon tube. Be sure the other three ball valves (A, B and D) that connect to the vent lines and CAS are closed.
    3. Remove the plug (E) from the bottom tee and connect an explosion proof evacuation pump capable of handling liquid. Have a liquid tight, container suitable for gasoline positioned to receive any fluid that may exit the system and start the pump. If no liquid returns within 30 seconds, the bladder is dry – discontinue pumping, remove the pump, replace the plug (E) and return the ball valves to their normal, locked, positions.

DRAINING THE CAS:

- Should it be necessary to drain the CAS (between the bladder and steel wall):
    1. Close the ball valve at the top (A) of the CAS and also the two valves (B and C) on the vertical risers.
    2. Remove the plug (E) in the bottom tee and place a metal container below the pipe opening.
    3. Carefully open the ball valve (D) at the bottom of the CAS – observe that the container that is being drained into does not overflow – empty container as required until fluid no longer comes from the pipe when the valve is open.
    4. Close the ball valve (D) and replace the plug (E) into the tee.
    5. Return all ball valves to their normal locked positions.

DRW NO: 9900–9945

CRITERIA
SOIL BEARING = 1000 psf ADJ.
SEISMIC ZONE 4 Na=1.5
Ca=0.44Na

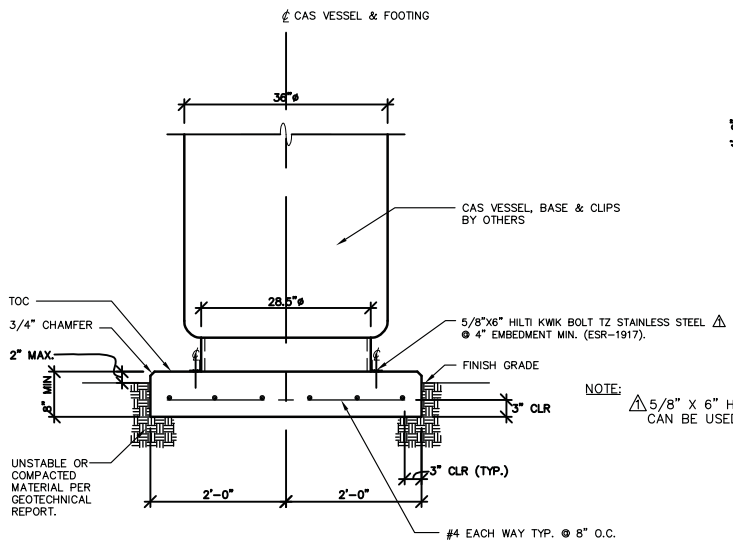

SECTION @ CAS SLAB
SCALE = 3/4" = 1'-0"

MIN. CONCRETE COMP STRENGTH = 2500 psi
MIN. REINF. YIELD STRENGTH = 40000 psi

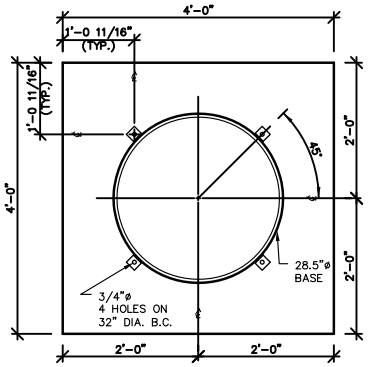

BASE PLAN
SCALE = 3/4" = 1'-0"

NOTE:
⚠ 5/8" X 6" HILTI KWIK BOLT 3 (ESR-1385, ISSUED 09/01/04) CAN BE USED IF ICC-ES ACCEPTANCE CRITERIA IS NOT REQUIRED.

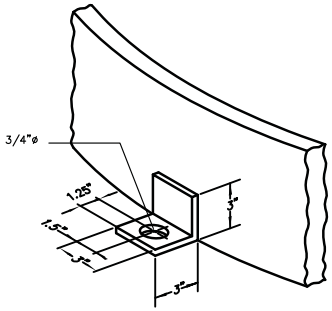

TYPICAL HOLD DOWN CLIP
SCALE = NONE

REV	DESCRIPTION	ECN NO	BY	DATE
6	KB-TZ SS WAS KB3, ESR-1917 WAS ESR-1385, ADDED NOTE 1	–	TF / MB	12/21/07
5	ADDED "CAS VESSEL"	–	TF / MB	10/24/07
4	ESR-1385 WAS ICBO ER4627	–	TF / MB	07/23/07

The information disclosed hereon includes proprietary rights of Franklin Fueling Systems, Inc. Neither this drawing nor the information disclosed thereon may be reproduced or transferred to other documents, or used or disclosed to others for any purpose, except as specifically authorized in writing by Franklin Fueling Systems. This drawing must be returned to Franklin Fueling Systems upon request.

MATERIAL:

DO NOT SCALE DRAWING

STANDARD INCH TOLERANCES (UNLESS OTHERWISE SPECIFIED)
.XX ± .02
.XXX ± .005
ANGULAR ± 1/2°

SPECIAL DIST:

Franklin Fueling Systems
Madison, WI 53718

TITLE: CLEAN AIR SEPARATOR MOUNTING SLAB DETAILS

DRAWN:	DATE:	DRW NO:	SUFFIX:
JWH	07/31/02	9900–9945	
APPRVL:	DATE:	SCALE: 1/8	SHEET 1 OF 1

DRW NO: 9900–9945H

CRITERIA
SOIL BEARING = 1000 psf ADJ.
SEISMIC ZONE 4 Na=1.5
Ca=0.44Na

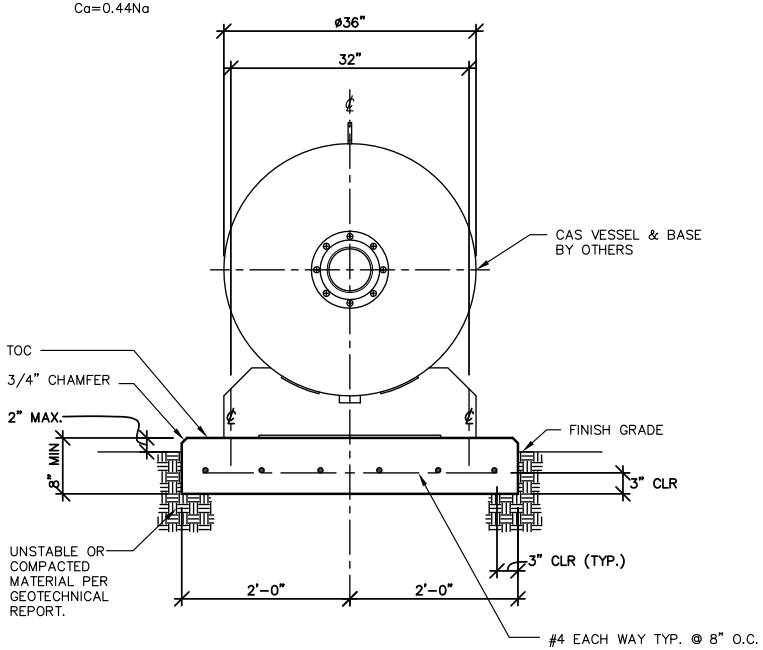

SECTION @ CAS SLAB

MIN. CONCRETE COMP STRENGTH = 2500 psi
MIN. REINF. YIELD STRENGTH = 40000 psi

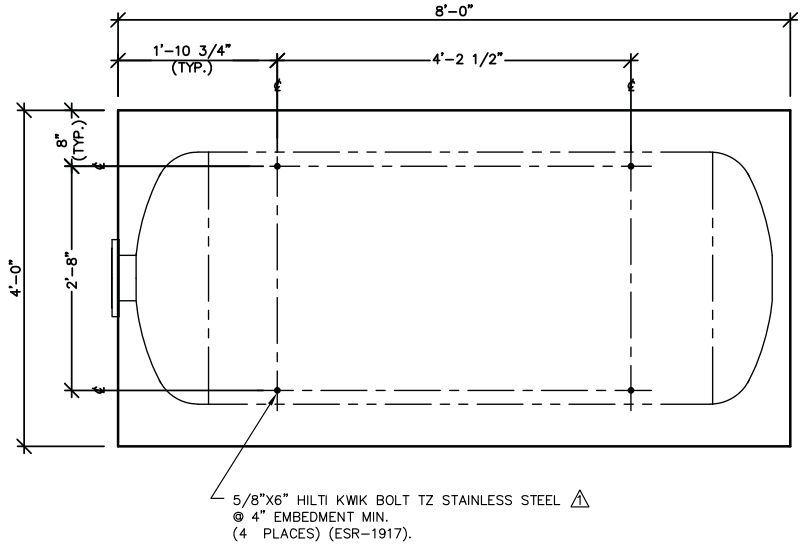

BASE PLAN

NOTE:
⚠1 5/8" X 6" HILTI KWIK BOLT 3 (ESR–1385, ISSUED 09/01/04) CAN BE USED IF ICC–ES ACCEPTANCE CRITERIA IS NOT REQUIRED.

REV	DESCRIPTION	ECN NO	BY	DATE
4	KB–TZ SS WAS KB3, ESR–1917 WAS ESR–1385, ADDED NOTE 1	–	TF / MB	12/21/07
3	ADDED "CAS VESSEL"	–	TF / MDB	10/24/07
2	ESR–1385 WAS ICBO ER4627	–	TF / MDB	07/23/07

The information disclosed hereon includes proprietary rights of Franklin Fueling Systems, Inc. Neither this drawing nor the information disclosed thereon may be reproduced or transferred to other documents, or used or disclosed to others for any purpose, except as specifically authorized in writing by Franklin Fueling Systems. This drawing must be returned to Franklin Fueling Systems upon request.

MATERIAL:

DO NOT SCALE DRAWING

STANDARD INCH TOLERANCES (UNLESS OTHERWISE SPECIFIED)

.XX ± .02
.XXX ± .005
ANGULAR ± 1/2°

SPECIAL DIST:

Franklin Fueling Systems
Madison, WI 53718

TITLE:
CLEAN AIR SEPARATOR HORIZONTAL MOUNTING SLAB DETAILS

DRAWN:	DATE:	DRW NO:	SUFFIX:
TF	05/22/07	9900–9945	H
APPRVL: MDB	DATE: 06/05/07	SCALE: 3/4"=1'	SHEET 1 OF 1

DRW NO: 9900–9942

NOTICE

DRAWINGS ARE TWO DIMENSIONAL REPRESENTATION OF TYPICAL CLEAN AIR SEPARATOR (CAS) INSTALLATION. ACTUAL CAS INSTALLATIONS WILL VARY SLIGHTLY FROM THE REPRESENTATION SHOWN.

INSTALLER SHALL NOT LOOSEN, ROTATE OR REMOVE FACTORY INSTALLED FITTINGS OR FLANGE AS THIS MAY DAMAGE FACTORY SEALS AND VOID WARRANTY.

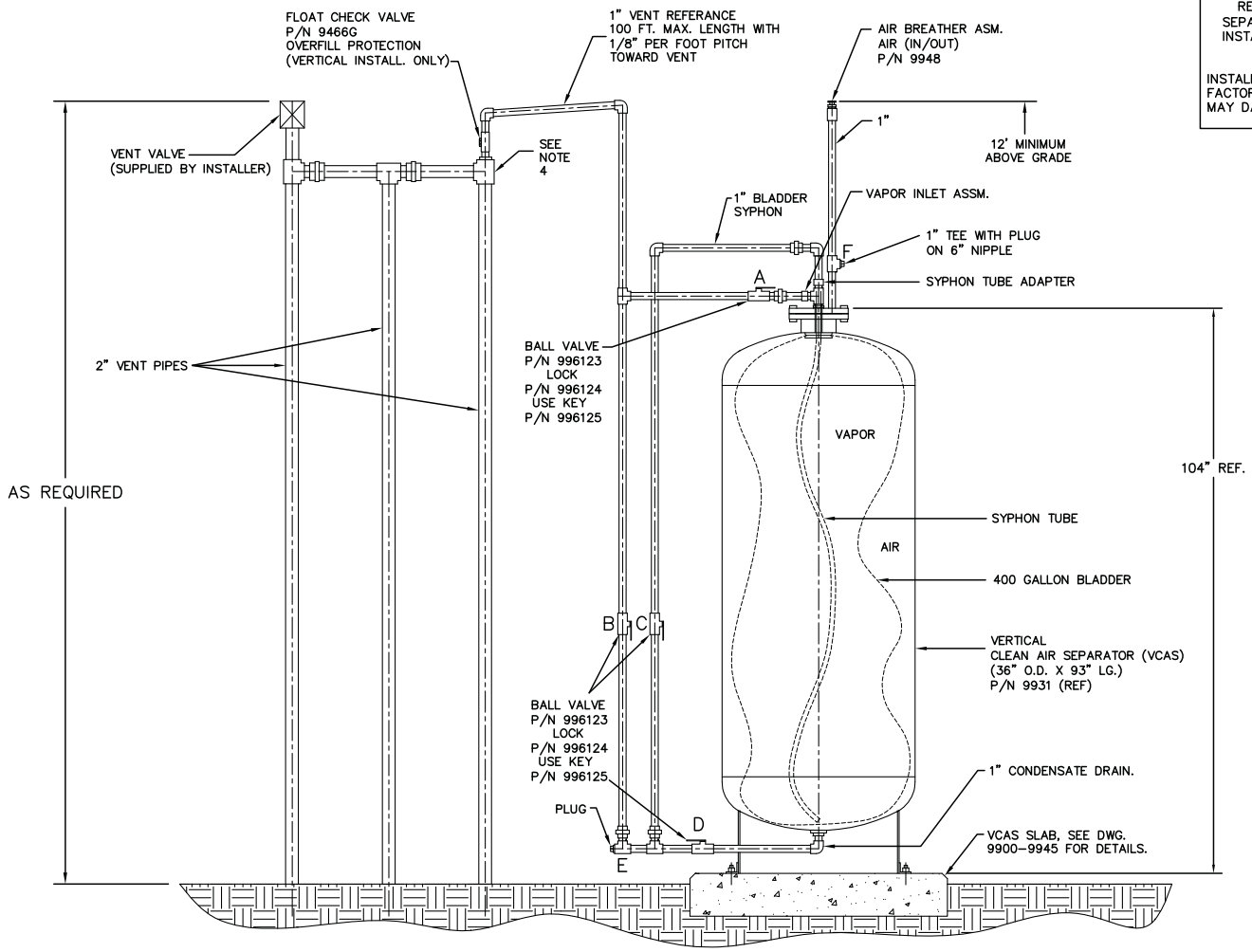

NOTE:
1 – ALL BALL VALVES (B.V.) TO BE UL LISTED AND HAVE PADLOCK FEATURE.
2 – PASSIVE PRESSURE CONTROL–NO ELECTRICAL PADLOCK FEATURE.
2 – PASSIVE PRESSURE CONTROL–NO ELECTRICAL POWER REQUIRED.
3 – AIR BREATHER MUST BE INSTALLED AT A MINIMUM HEIGHT OF 12' ABOVE GRADE.
4 – VENT LINE TIE IN CAN BE INSTALLED ANYWHERE ALONG THE VENT STACK LINE PROVIDED THAT PIPE SLOPE IS MAINTAINED AND THE CHECK VALVE IS IN THE CORRECT VERTICAL INSTALLATION.
5 – ONLY GALVANIZED PIPE IS TO BE USED FOR PIPING CONNECTIONS

REV	DESCRIPTION	ECN NO	BY	DATE
14	ADDED "SUPPLIED BY INSTALLER"	401101	TF / MDB	12/10/07

The information disclosed hereon includes proprietary rights of Franklin Fueling Systems, Inc. Neither this drawing nor the information disclosed thereon may be reproduced or transferred to other documents, or used or disclosed to others for any purpose, except as specifically authorized in writing by Franklin Fueling Systems. This drawing must be returned to Franklin Fueling Systems upon request.

MATERIAL:

DO NOT SCALE DRAWING

STANDARD INCH TOLERANCES (UNLESS OTHERWISE SPECIFIED): .XX ± .02, .XXX ± .005, ANGULAR ± 1/2°

SPECIAL DIST:

Franklin Fueling Systems
Madison, WI 53718

TITLE: CLEAN AIR SEPARATOR VERTICAL INSTALLATION

DRAWN:	DATE:	DRW NO:	SUFFIX:
JWH	05/14/02	9900–9942	
APPRVL: MDB	DATE: 06/05/07	ACAD HLY	SCALE: N.T.S. SHEET 1 OF 1

DRW NO: 9900–9942H

NOTICE

DRAWINGS ARE TWO DIMENSIONAL REPRESENTATION OF TYPICAL CLEAN AIR SEPARATOR (CAS) INSTALLATION. ACTUAL CAS INSTALLATIONS WILL VARY SLIGHTLY FROM THE REPRESENTATION SHOWN.

INSTALLER SHALL NOT LOOSEN, ROTATE OR REMOVE FACTORY INSTALLED FITTINGS OR FLANGE AS THIS MAY DAMAGE FACTORY SEALS AND VOID WARRANTY.

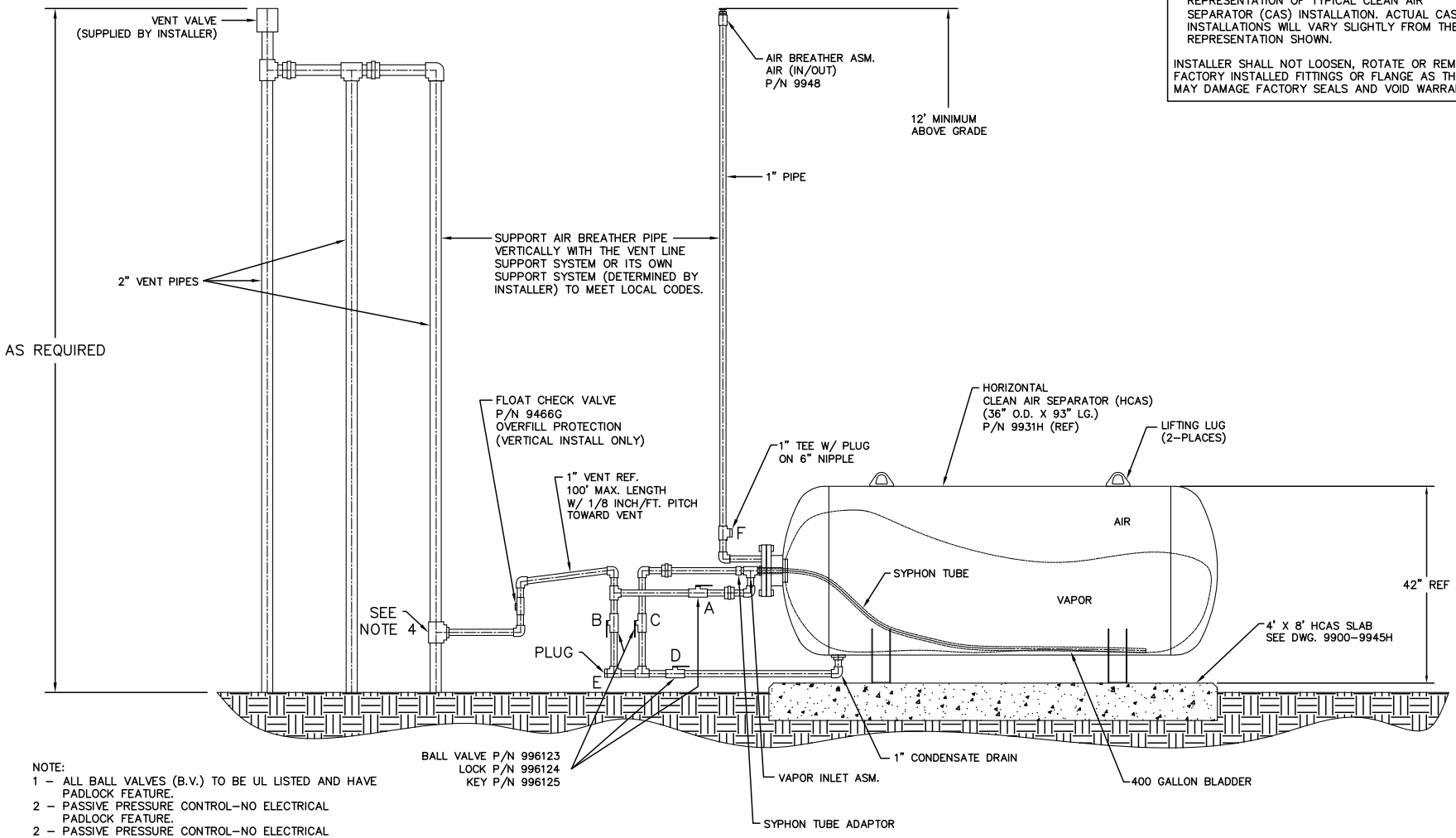

NOTE:
1 – ALL BALL VALVES (B.V.) TO BE UL LISTED AND HAVE PADLOCK FEATURE.
2 – PASSIVE PRESSURE CONTROL–NO ELECTRICAL PADLOCK FEATURE.
2 – PASSIVE PRESSURE CONTROL–NO ELECTRICAL POWER REQUIRED.
3 – AIR BREATHER MUST BE INSTALLED AT A MINIMUM HEIGHT OF 12' ABOVE GRADE ON 1" PIPE.
4 – VENT LINE TIE IN CAN BE INSTALLED ANYWHERE ALONG THE VENT STACK LINE PROVIDED THAT PIPE SLOPE IS MAINTAINED AND THE CHECK VALVE IS IN THE CORRECT VERTICAL INSTALLATION.
5 – ONLY GALVANIZED PIPE IS TO BE USED FOR PIPING CONNECTIONS
6 – HCAS TO SLOPE SLIGHTLY TOWARD CONDENSATE DRAIN. PITCH SLAB WITHIN 1/8 INCH/FOOT TOWARD CONDENSATE DRAIN END OR SHIM HCAS FOR PROPER VESSEL DRAINAGE.

REV	DESCRIPTION	ECN NO	BY	DATE
6	ADDED "SUPPLIED BY INSTALLER" & "SUPPORT...." NOTE	401101	TF / MDB	12/10/07

The information disclosed hereon includes proprietary rights of Franklin Fueling Systems, Inc. Neither this drawing nor the information disclosed thereon may be reproduced or transferred to other documents, or used or disclosed to others for any purpose, except as specifically authorized in writing by Franklin Fueling Systems. This drawing must be returned to Franklin Fueling Systems upon request.

MATERIAL:

DO NOT SCALE DRAWING

STANDARD INCH TOLERANCES (UNLESS OTHERWISE SPECIFIED): .XX ± .02, .XXX ± .005, ANGULAR ± 1/2°

SPECIAL DIST:

Franklin Fueling Systems
Madison, WI 53718

TITLE: CLEAN AIR SEPARATOR HORIZONTAL INSTALLATION

DRAWN:	DATE:	DRW NO:	SUFFIX:
TF	05/23/07	9900–9942	H
APPRVL: MDB	DATE: 06/05/07	SCALE: N.T.S.	SHEET 1 OF 1

DRW NO: 9900–9971

NOTICE

DRAWINGS ARE TWO DIMENSIONAL REPRESENTATION OF TYPICAL CLEAN AIR SEPARATOR (CAS) INSTALLATION. ACTUAL CAS INSTALLATIONS WILL VARY SLIGHTLY FROM THE REPRESENTATION SHOWN.

INSTALLER SHALL NOT LOOSEN, ROTATE OR REMOVE FACTORY INSTALLED FITTINGS OR FLANGE AS THIS MAY DAMAGE FACTORY SEALS AND VOID WARRANTY.

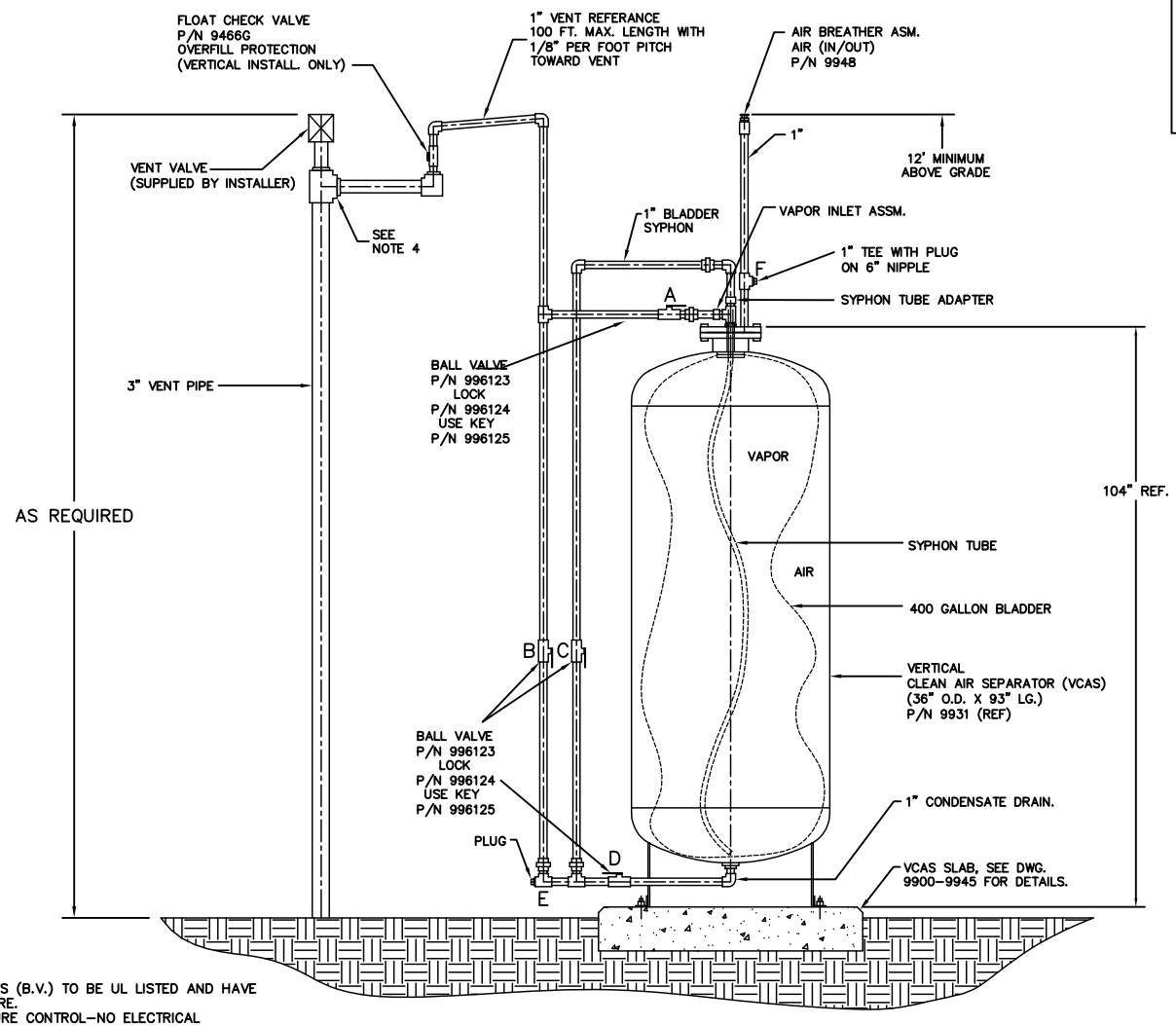

NOTE:
1 – ALL BALL VALVES (B.V.) TO BE UL LISTED AND HAVE PADLOCK FEATURE.
2 – PASSIVE PRESSURE CONTROL–NO ELECTRICAL PADLOCK FEATURE.
2 – PASSIVE PRESSURE CONTROL–NO ELECTRICAL POWER REQUIRED.
3 – AIR BREATHER MUST BE INSTALLED AT A MINIMUM HEIGHT OF 12' ABOVE GRADE.
4 – VENT LINE TIE IN CAN BE INSTALLED ANYWHERE ALONG THE VENT STACK LINE PROVIDED THAT PIPE SLOPE IS MAINTAINED AND THE CHECK VALVE IS IN THE CORRECT VERTICAL INSTALLATION.
5 – ONLY GALVANIZED PIPE IS TO BE USED FOR PIPING CONNECTIONS

The information disclosed hereon includes proprietary rights of Franklin Fueling Systems, Inc. Neither this drawing nor the information disclosed thereon may be reproduced or transferred to other documents, or used or disclosed to others for any purpose, except as specifically authorized in writing by Franklin Fueling Systems. This drawing must be returned to Franklin Fueling Systems upon request.

MATERIAL:

DO NOT SCALE DRAWING

STANDARD INCH TOLERANCES (UNLESS OTHERWISE SPECIFIED): .XX ±.02, .XXX ±.005, ANGULAR ±1/2°

SPECIAL DIST:

REV	DESCRIPTION	ECN NO	BY	DATE
7	ADDED "SUPPLIED BY INSTALLER"	401101	TF MDB	12/10/07

Franklin Fueling Systems
Madison, WI 53718

TITLE: CLEAN AIR SEPARATOR VERTICAL INSTALLATION (1 VENT)

DRAWN:	DATE:	DRW NO:	SUFFIX:
JWH	05/14/02	9900–9971	
APPRVL: MDB	DATE: 06/05/07	ACAD HLY	SCALE: N.T.S. SHEET 1 OF 1

DRW NO: 9900–9971H

NOTICE

DRAWINGS ARE TWO DIMENSIONAL REPRESENTATION OF TYPICAL CLEAN AIR SEPARATOR (CAS) INSTALLATION. ACTUAL CAS INSTALLATIONS WILL VARY SLIGHTLY FROM THE REPRESENTATION SHOWN.

INSTALLER SHALL NOT LOOSEN, ROTATE OR REMOVE FACTORY INSTALLED FITTINGS OR FLANGE AS THIS MAY DAMAGE FACTORY SEALS AND VOID WARRANTY.

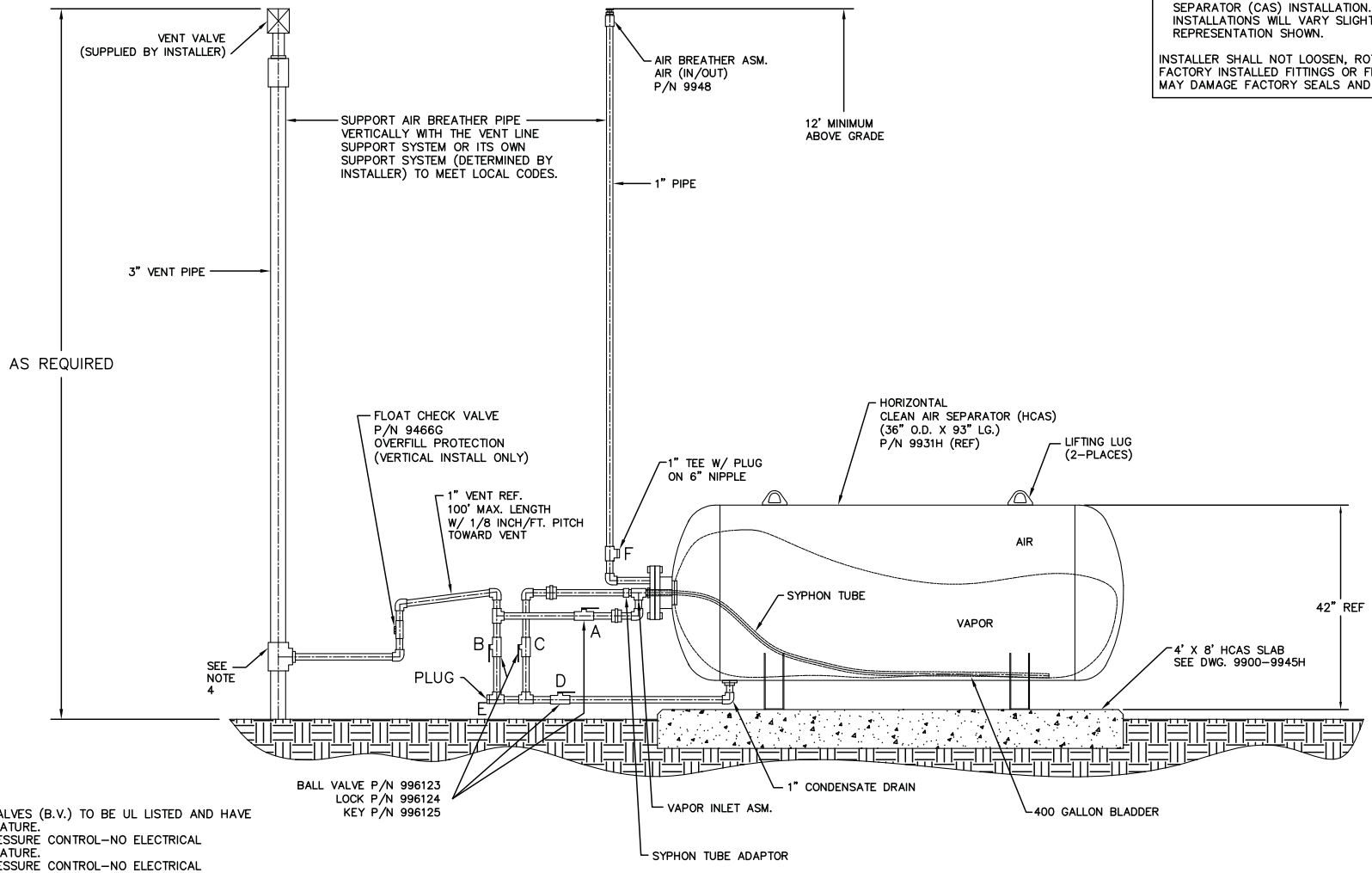

NOTE:
1 – ALL BALL VALVES (B.V.) TO BE UL LISTED AND HAVE PADLOCK FEATURE.
2 – PASSIVE PRESSURE CONTROL–NO ELECTRICAL PADLOCK FEATURE.
2 – PASSIVE PRESSURE CONTROL–NO ELECTRICAL POWER REQUIRED.
3 – AIR BREATHER MUST BE INSTALLED AT A MINIMUM HEIGHT OF 12' ABOVE GRADE ON 1" PIPE.
4 – VENT LINE TIE IN CAN BE INSTALLED ANYWHERE ALONG THE VENT STACK LINE PROVIDED THAT PIPE SLOPE IS MAINTAINED AND THE CHECK VALVE IS IN THE CORRECT VERTICAL INSTALLATION.
5 – ONLY GALVANIZED PIPE IS TO BE USED FOR PIPING CONNECTIONS
6 – HCAS TO SLOPE SLIGHTLY TOWARD CONDENSATE DRAIN. PITCH SLAB WITHIN 1/8 INCH/FOOT TOWARD CONDENSATE DRAIN END OR SHIM HCAS FOR PROPER VESSEL DRAINAGE.

REV	DESCRIPTION	ECN NO	BY	DATE
6	ADDED "SUPPLIED BY INSTALLER" & "SUPPORT...." NOTE	401101	TF / MDB	12/10/07

The information disclosed hereon includes proprietary rights of Franklin Fueling Systems, Inc. Neither this drawing nor the information disclosed thereon may be reproduced or transferred to other documents, or used or disclosed to others for any purpose, except as specifically authorized in writing by Franklin Fueling Systems. This drawing must be returned to Franklin Fueling Systems upon request.

MATERIAL:

DO NOT SCALE DRAWING

STANDARD INCH TOLERANCES (UNLESS OTHERWISE SPECIFIED): .XX ± .02, .XXX ± .005, ANGULAR ± 1/2°

SPECIAL DIST:

Franklin Fueling Systems
Madison, WI 53718

TITLE: CLEAN AIR SEPARATOR HORIZONTAL INSTALLATION (1 VENT VALVE)

DRAWN:	DATE:	DRW NO:	SUFFIX:
TF	05/22/07	9900–9971	H
APPRVL: MDB	DATE: 06/05/07	SCALE: N.T.S.	SHEET 1 OF 1

DRW NO: 9900–9972

NOTICE

DRAWINGS ARE TWO DIMENSIONAL REPRESENTATION OF TYPICAL CLEAN AIR SEPARATOR (CAS) INSTALLATION. ACTUAL CAS INSTALLATIONS WILL VARY SLIGHTLY FROM THE REPRESENTATION SHOWN.

INSTALLER SHALL NOT LOOSEN, ROTATE OR REMOVE FACTORY INSTALLED FITTINGS OR FLANGE AS THIS MAY DAMAGE FACTORY SEALS AND VOID WARRANTY.

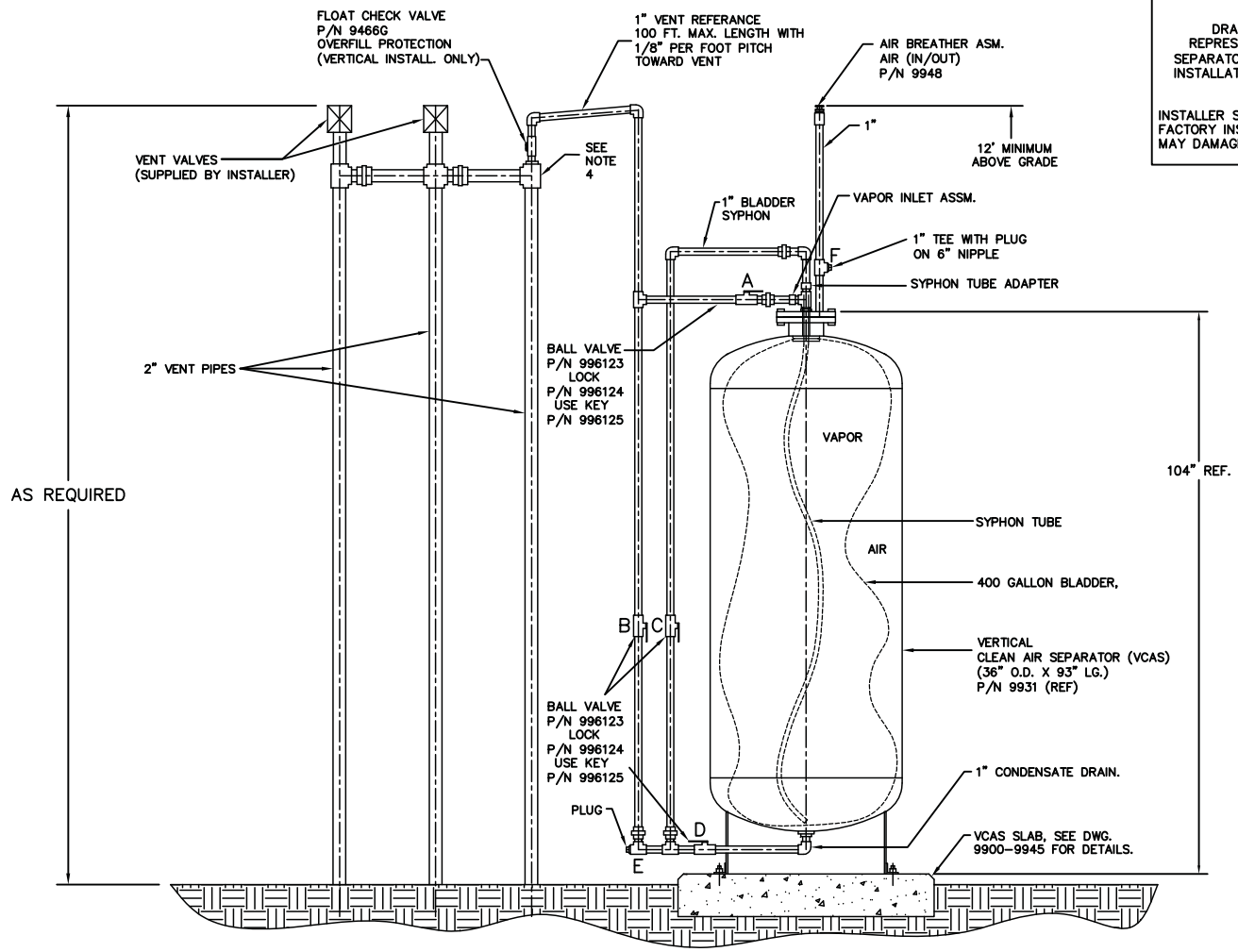

NOTE:
1 – ALL BALL VALVES (B.V.) TO BE UL LISTED AND HAVE PADLOCK FEATURE.
2 – PASSIVE PRESSURE CONTROL–NO ELECTRICAL PADLOCK FEATURE.
2 – PASSIVE PRESSURE CONTROL–NO ELECTRICAL POWER REQUIRED.
3 – AIR BREATHER MUST BE INSTALLED AT A MINIMUM HEIGHT OF 12' ABOVE GRADE.
4 – VENT LINE TIE IN CAN BE INSTALLED ANYWHERE ALONG THE VENT STACK LINE PROVIDED THAT PIPE SLOPE IS MAINTAINED AND THE CHECK VALVE IS IN THE CORRECT VERTICAL INSTALLATION.
5 – ONLY GALVANIZED PIPE IS TO BE USED FOR PIPING CONNECTIONS

REV	DESCRIPTION	ECN NO	BY	DATE
7	ADDED "SUPPLIED BY INSTALLER"	401101	TF / MDB	12/10/07

The information disclosed hereon includes proprietary rights of Franklin Fueling Systems, Inc. Neither this drawing nor the information disclosed thereon may be reproduced or transferred to other documents, or used or disclosed to others for any purpose, except as specifically authorized in writing by Franklin Fueling Systems. This drawing must be returned to Franklin Fueling Systems upon request.

MATERIAL:

DO NOT SCALE DRAWING

STANDARD INCH TOLERANCES (UNLESS OTHERWISE SPECIFIED): .XX ± .02, .XXX ± .005, ANGULAR ± 1/2°

SPECIAL DIST:

Franklin Fueling Systems
Madison, WI 53718

TITLE: CLEAN AIR SEPARATOR VERTICAL INSTALLATION (2 VENT)

DRAWN:	DATE:	DRW NO:	SUFFIX:
JWH	05/14/02	9900–9972	
APPRVL: MDB	DATE: 06/05/07	ACAD HLY	SCALE: N.T.S.	SHEET 1 OF 1

DRW NO: 9900–9972H

NOTICE

DRAWINGS ARE TWO DIMENSIONAL REPRESENTATION OF TYPICAL CLEAN AIR SEPARATOR (CAS) INSTALLATION. ACTUAL CAS INSTALLATIONS WILL VARY SLIGHTLY FROM THE REPRESENTATION SHOWN.

INSTALLER SHALL NOT LOOSEN, ROTATE OR REMOVE FACTORY INSTALLED FITTINGS OR FLANGE AS THIS MAY DAMAGE FACTORY SEALS AND VOID WARRANTY.

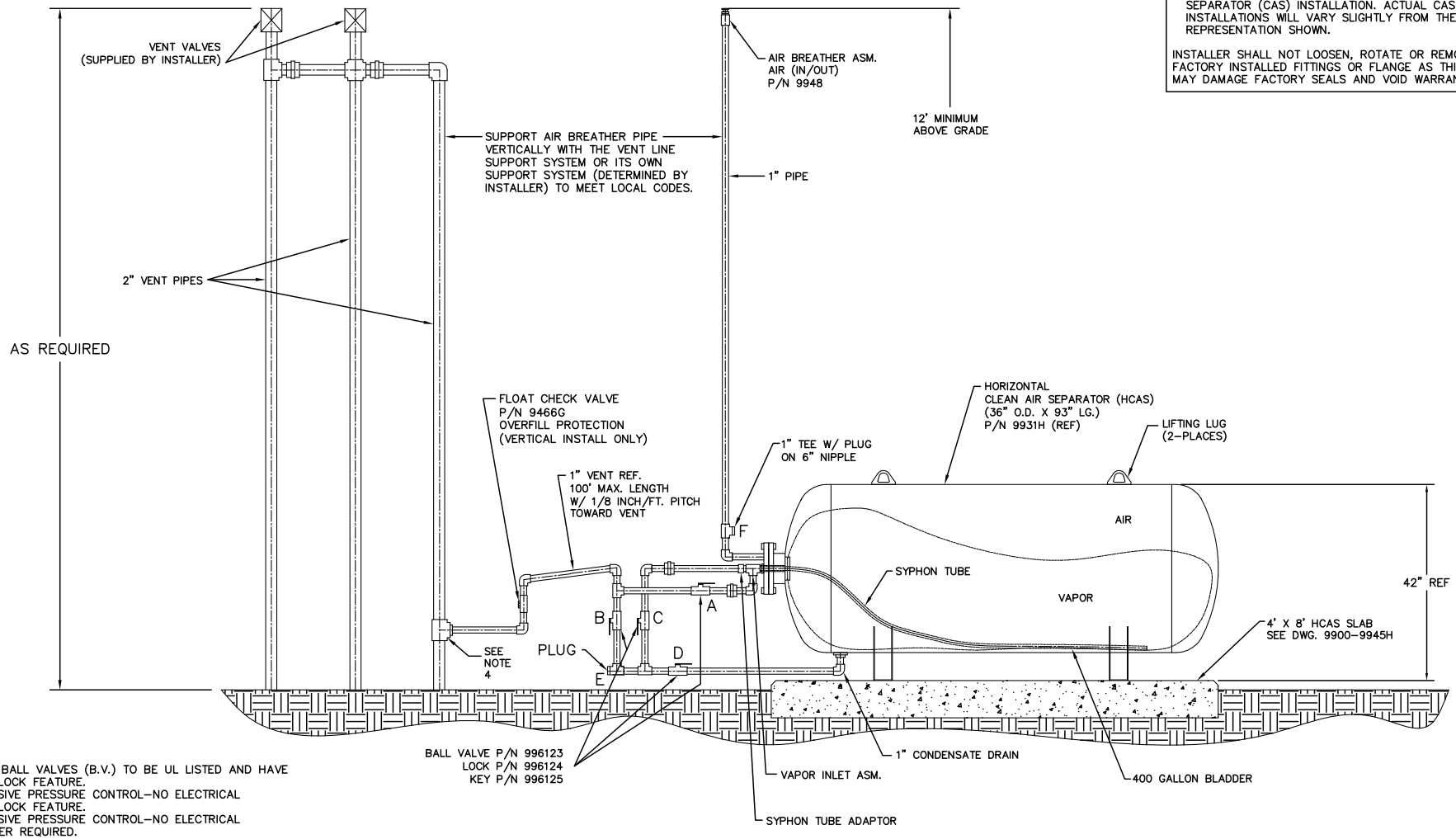

NOTE:
1 – ALL BALL VALVES (B.V.) TO BE UL LISTED AND HAVE PADLOCK FEATURE.
2 – PASSIVE PRESSURE CONTROL–NO ELECTRICAL PADLOCK FEATURE.
2 – PASSIVE PRESSURE CONTROL–NO ELECTRICAL POWER REQUIRED.
3 – AIR BREATHER MUST BE INSTALLED AT A MINIMUM HEIGHT OF 12' ABOVE GRADE ON 1" PIPE.
4 – VENT LINE TIE IN CAN BE INSTALLED ANYWHERE ALONG THE VENT STACK LINE PROVIDED THAT PIPE SLOPE IS MAINTAINED AND THE CHECK VALVE IS IN THE CORRECT VERTICAL INSTALLATION.
5 – ONLY GALVANIZED PIPE IS TO BE USED FOR PIPING CONNECTIONS
6 – HCAS TO SLOPE SLIGHTLY TOWARD CONDENSATE DRAIN. PITCH SLAB WITHIN 1/8 INCH/FOOT TOWARD CONDENSATE DRAIN END OR SHIM HCAS FOR PROPER VESSEL DRAINAGE.

REV	DESCRIPTION	ECN NO	BY	DATE
6	ADDED "SUPPLIED BY INSTALLER" & "SUPPORT...." NOTE	401101	TF / MDB	12/10/07

The information disclosed hereon includes proprietary rights of Franklin Fueling Systems, Inc. Neither this drawing nor the information disclosed thereon may be reproduced or transferred to other documents, or used or disclosed to others for any purpose, except as specifically authorized in writing by Franklin Fueling Systems. This drawing must be returned to Franklin Fueling Systems upon request.

MATERIAL:

DO NOT SCALE DRAWING

STANDARD INCH TOLERANCES (UNLESS OTHERWISE SPECIFIED): .XX ± .02, .XXX ± .005, ANGULAR ± 1/2°

SPECIAL DIST:

Franklin Fueling Systems
Madison, WI 53718

TITLE: CLEAN AIR SEPARATOR HORIZONTAL INSTALLATION (2 VENT VALVE)

DRAWN:	DATE:	DRW NO:	SUFFIX:
TF	05/22/07	9900–9972	H
APPRVL: MDB	DATE: 06/05/07	SCALE: N.T.S.	SHEET 1 OF 1

DRW NO: 9900–9973

NOTICE

DRAWINGS ARE TWO DIMENSIONAL REPRESENTATION OF TYPICAL CLEAN AIR SEPARATOR (CAS) INSTALLATION. ACTUAL CAS INSTALLATIONS WILL VARY SLIGHTLY FROM THE REPRESENTATION SHOWN.

INSTALLER SHALL NOT LOOSEN, ROTATE OR REMOVE FACTORY INSTALLED FITTINGS OR FLANGE AS THIS MAY DAMAGE FACTORY SEALS AND VOID WARRANTY.

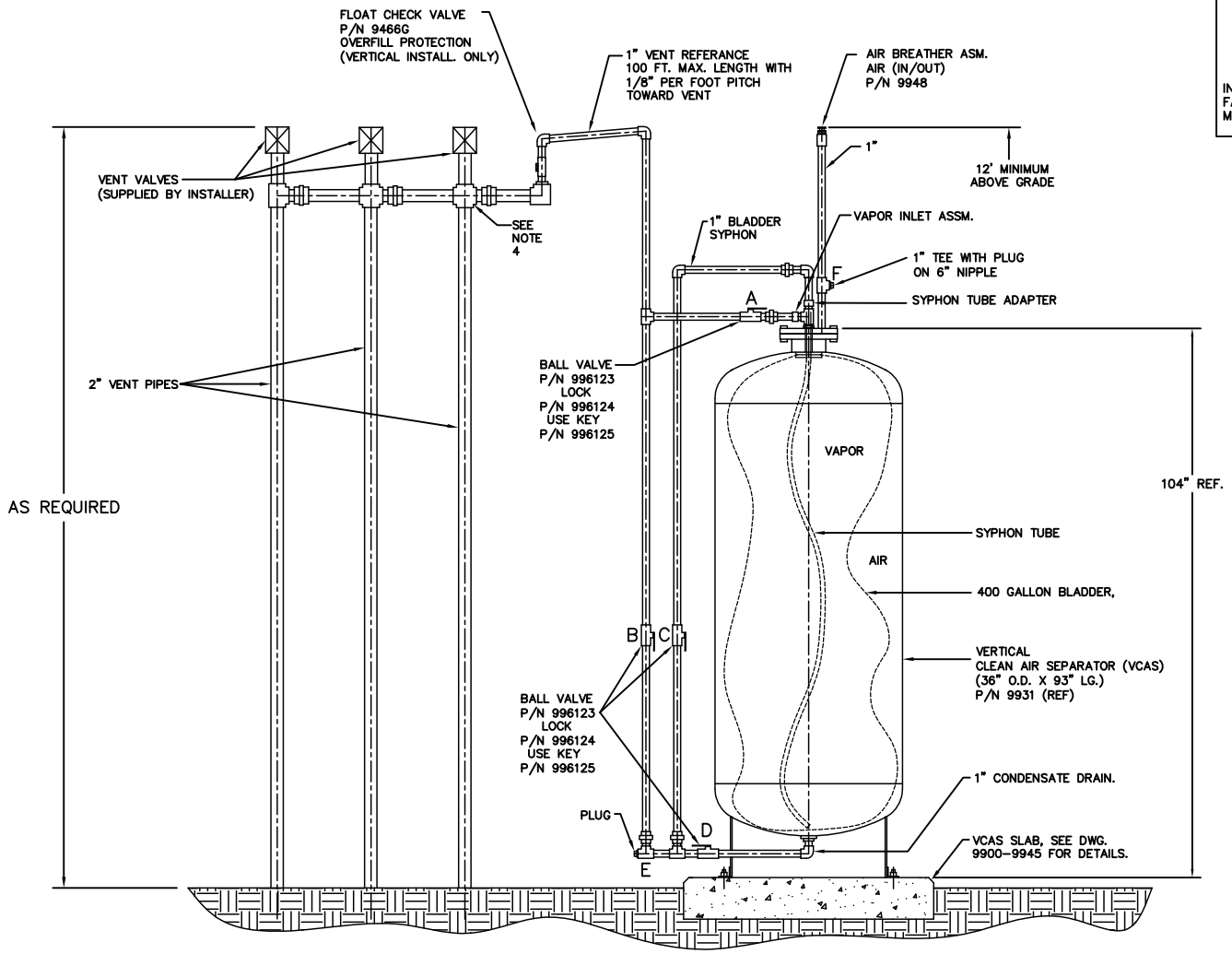

NOTE:
1 – ALL BALL VALVES (B.V.) TO BE UL LISTED AND HAVE PADLOCK FEATURE.
2 – PASSIVE PRESSURE CONTROL–NO ELECTRICAL PADLOCK FEATURE.
2 – PASSIVE PRESSURE CONTROL–NO ELECTRICAL POWER REQUIRED.
3 – AIR BREATHER MUST BE INSTALLED AT A MINIMUM HEIGHT OF 12' ABOVE GRADE.
4 – VENT LINE TIE IN CAN BE INSTALLED ANYWHERE ALONG THE VENT STACK LINE PROVIDED THAT PIPE SLOPE IS MAINTAINED AND THE CHECK VALVE IS IN THE CORRECT VERTICAL INSTALLATION.
5 – ONLY GALVANIZED PIPE IS TO BE USED FOR PIPING CONNECTION

REV	DESCRIPTION	ECN NO	BY	DATE
7	ADDED "SUPPLIED BY INSTALLER"	401101	TF / MDB	12/10/07

The information disclosed hereon includes proprietary rights of Franklin Fueling Systems, Inc. Neither this drawing nor the information disclosed thereon may be reproduced or transferred to other documents, or used or disclosed to others for any purpose, except as specifically authorized in writing by Franklin Fueling Systems. This drawing must be returned to Franklin Fueling Systems upon request.

MATERIAL:

DO NOT SCALE DRAWING

STANDARD INCH TOLERANCES (UNLESS OTHERWISE SPECIFIED): .XX ± .02, .XXX ± .005, ANGULAR ± 1/2°

SPECIAL DIST:

Franklin Fueling Systems
Madison, WI 53718

TITLE: CLEAN AIR SEPARATOR VERTICAL INSTALLATION (3 VENT)

DRAWN:	DATE:	DRW NO:	SUFFIX:
JWH	05/14/02	9900–9973	
APPRVL: MDB	DATE: 06/05/07	ACAD HLY	SCALE: N.T.S. SHEET 1 OF 1

DRW NO: 9900–9973H

NOTICE

DRAWINGS ARE TWO DIMENSIONAL REPRESENTATION OF TYPICAL CLEAN AIR SEPARATOR (CAS) INSTALLATION. ACTUAL CAS INSTALLATIONS WILL VARY SLIGHTLY FROM THE REPRESENTATION SHOWN.

INSTALLER SHALL NOT LOOSEN, ROTATE OR REMOVE FACTORY INSTALLED FITTINGS OR FLANGE AS THIS MAY DAMAGE FACTORY SEALS AND VOID WARRANTY.

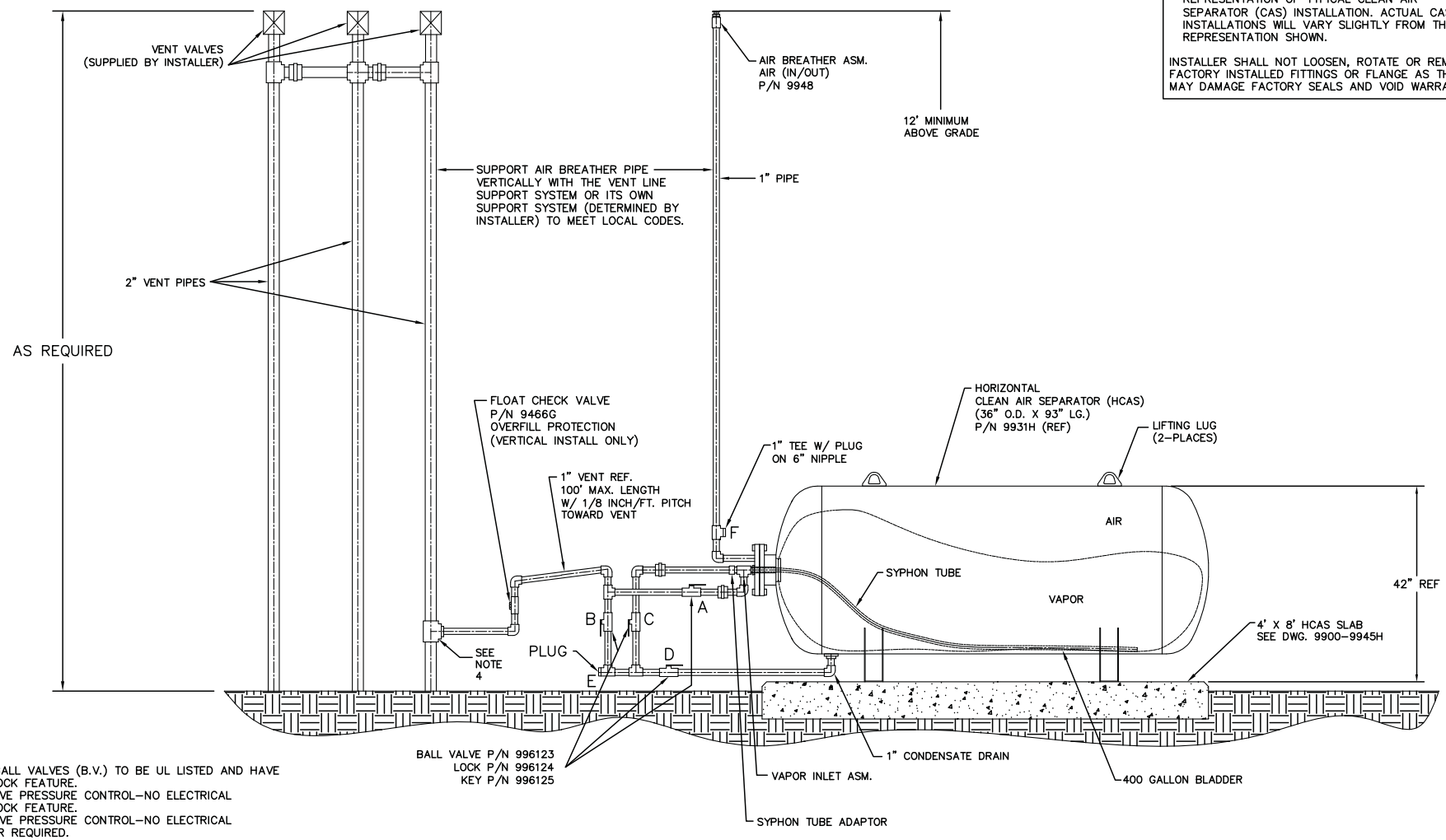

NOTE:
1 – ALL BALL VALVES (B.V.) TO BE UL LISTED AND HAVE PADLOCK FEATURE.
2 – PASSIVE PRESSURE CONTROL–NO ELECTRICAL PADLOCK FEATURE.
2 – PASSIVE PRESSURE CONTROL–NO ELECTRICAL POWER REQUIRED.
3 – AIR BREATHER MUST BE INSTALLED AT A MINIMUM HEIGHT OF 12' ABOVE GRADE ON 1" PIPE.
4 – VENT LINE TIE IN CAN BE INSTALLED ANYWHERE ALONG THE VENT STACK LINE PROVIDED THAT PIPE SLOPE IS MAINTAINED AND THE CHECK VALVE IS IN THE CORRECT VERTICAL INSTALLATION.
5 – ONLY GALVANIZED PIPE IS TO BE USED FOR PIPING CONNECTIONS
6 – HCAS TO SLOPE SLIGHTLY TOWARD CONDENSATE DRAIN. PITCH SLAB WITHIN 1/8 INCH/FOOT TOWARD CONDENSATE DRAIN END OR SHIM HCAS FOR PROPER VESSEL DRAINAGE.

REV	DESCRIPTION	ECN NO	BY	DATE
6	ADDED "SUPPLIED BY INSTALLER" & "SUPPORT...." NOTE	401101	TF / MDB	12/10/07

The information disclosed hereon includes proprietary rights of Franklin Fueling Systems, Inc. Neither this drawing nor the information disclosed thereon may be reproduced or transferred to other documents, or used or disclosed to others for any purpose, except as specifically authorized in writing by Franklin Fueling Systems. This drawing must be returned to Franklin Fueling Systems upon request.

MATERIAL:

DO NOT SCALE DRAWING

STANDARD INCH TOLERANCES (UNLESS OTHERWISE SPECIFIED): .XX ± .02, .XXX ± .005, ANGULAR ± 1/2°

SPECIAL DIST:

Franklin Fueling Systems
Madison, WI 53718

TITLE: CLEAN AIR SEPARATOR HORIZONTAL INSTALLATION (3 VENT VALVE)

DRAWN:	DATE:	DRW NO:	SUFFIX:
TF	05/22/07	9900–9973	H
APPRVL: MDB	DATE: 06/05/07	SCALE: N.T.S.	SHEET 1 OF 1